修订 REV	标记 MARK	修改摘要 REVISION DESCRIPTION	签名 SIGNA TURE	日期 DATE
A0		NEW RELEEASE	WANG	2014-07-25

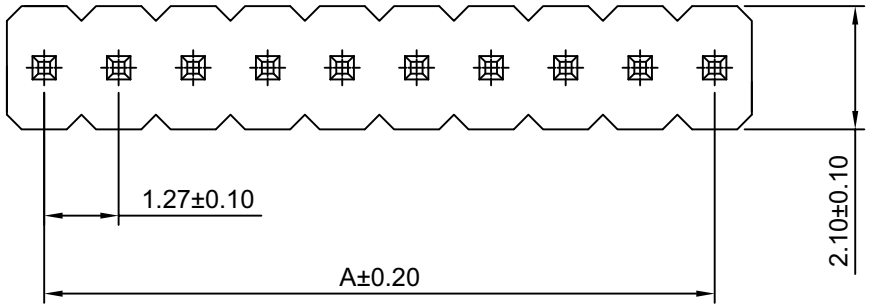

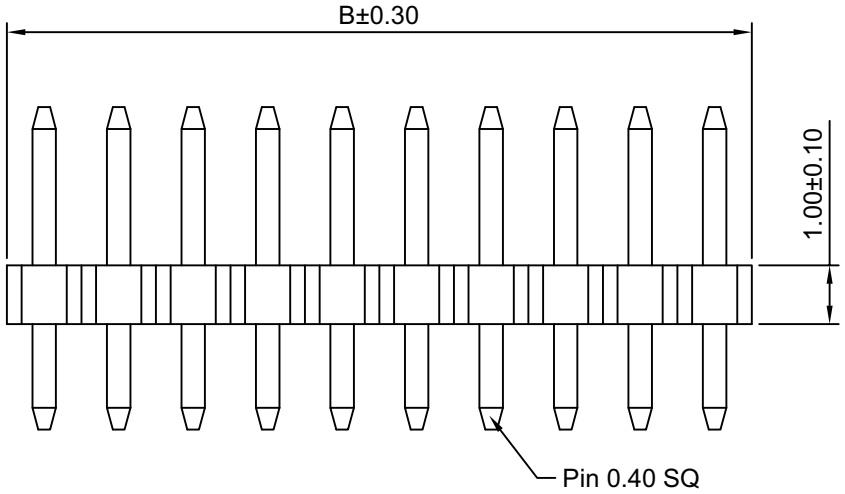

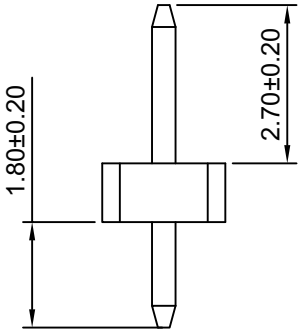

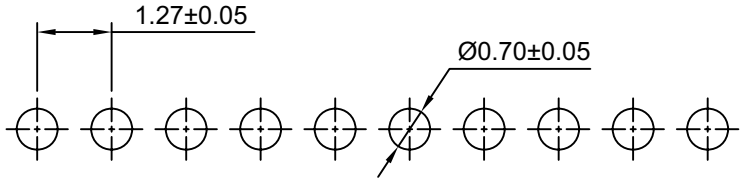

P.C.B LAYOUT

SPECIFICATIONS:

Current Rating:1A AC,DC
Voltage Rating: 30V AC,DC
Temperature Range: -25°C ~ +85°C
Contact Resistance: 20mΩ Max
Insulation Resistance: 1000MΩ Min
Withstanding Voltage: 500V AC/minute
Pin Material:Brass,Glod-flash
Material: PBT,UL94V-0(Black)

Ordering Information & Dimensions

Circuits	Dim(mm)		Circuits	Dim(mm)		Circuits	Dim(mm)	
	A	B		A	B		A	B
1P	----	1.27	18P	21.59	22.86	35P	43.18	44.46
2P	1.27	2.54	19P	22.86	24.13	36P	44.45	45.72
3P	2.54	3.81	20P	24.13	25.40	37P	45.72	46.99
4P	3.81	5.08	21P	25.40	26.67	38P	46.99	48.26
5P	5.08	6.35	22P	26.67	27.94	39P	48.26	49.53
6P	6.35	7.62	23P	27.94	29.21	40P	49.53	50.80
7P	7.62	8.89	24P	29.21	30.48	41P	50.80	52.07
8P	8.89	10.16	25P	30.48	31.75	42P	52.07	53.34
9P	10.16	11.43	26P	31.75	33.02	43P	53.34	54.61
10P	11.43	12.70	27P	33.02	34.29	44P	54.61	55.88
11P	12.70	13.97	28P	34.29	35.56	45P	55.88	57.15
12P	13.97	15.24	29P	35.56	36.83	46P	57.15	58.42
13P	15.24	16.51	30P	36.83	38.10	47P	58.42	59.69
14P	16.51	17.78	31P	38.10	39.37	48P	59.69	60.96
15P	17.78	19.05	32P	39.37	40.64	49P	60.96	62.23
16P	19.05	20.32	33P	40.64	41.91	50P	62.23	63.50
17P	20.32	21.59	34P	41.91	43.18			

深圳市华德共创科技有限公司
Shenzhen Huade co-create Technology Co.,LTD
TEL：0755-27129737 FAX：0755-29940187

-TOLERANCES- UNLESS OTHERWISE SPECIFIED 公差参数表									
X.X	±0.30	X.X°	±3°	APPD: 核准：	XIE	TITLE: 产品名称：	1.27mm Pitch 180 ° Wafer		
X.XX	±0.30	X.XX°	±2°	CHECK: 校对：	WANG	DATE	SCALE	UNIT	CODE NUMBER
X.XXX	±0.10	X.XXX°	±1°	DRAW: 绘图：	WANG	2014-07-25	8:1	mm	A008
						PART NO: 产品编号：	HDGC1276WV-XP		

修订 REV	标记 MARK	修改摘要 REVISION DESCRIPTION	签名 SIGNA TURE	日期 DATE
A0		NEW RELEEASE	WANG	2014-07-25

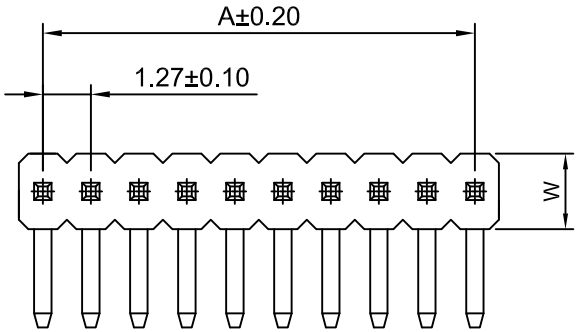

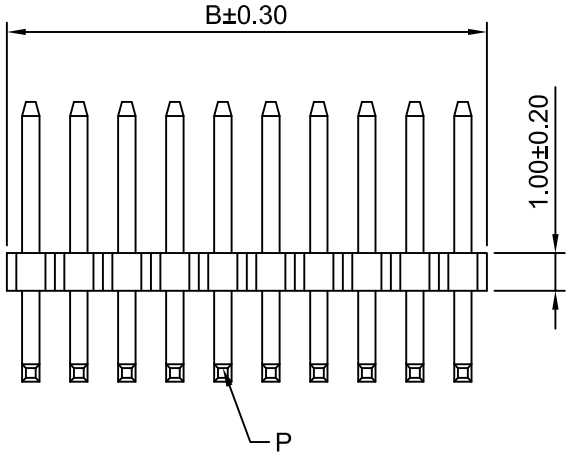

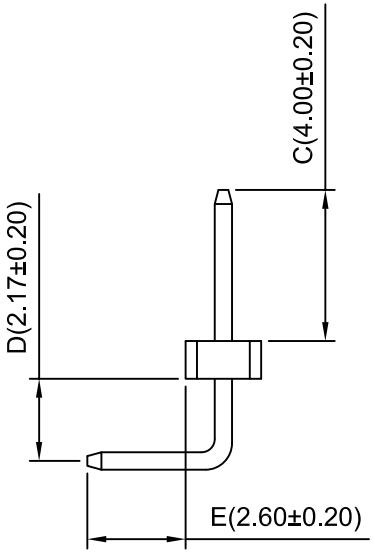

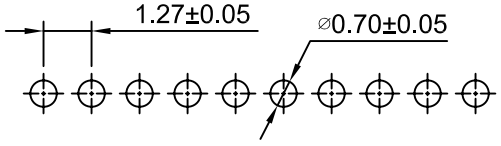

P.C.B LAYOUT

Ordering Information:

HDGC1276WR-XP - *** - ***
1 2 3

1.Part No.
2.Size(H):
(Blank):1.00mm(W:2.00mm,P:Pin 0.40SQ)
H15:1.50mm(W:2.40mm,P:Pin 0.40SQ)
H17:1.70mm(W:2.40mm,P:Pin 0.46SQ)
H20:2.00mm(W:2.50mm,P:Pin 0.40SQ)
H25:2.50mm(W:2.50mm,P:Pin 0.40SQ)
3.Material:
(Blank):Nylon 6T,UL94V-0
GWT :Nylon 6T,UL94V-0 GWT 750℃

SPECIFICATIONS:

Current Rating:1A AC,DC
Voltage Rating: 30V AC,DC
Temperature Range: -25°C ~ +85°C
Contact Resistance: 20mΩ Max
Insulation Resistance: 1000MΩ Min
Withstanding Voltage: 500V AC/minute
Pin Material:Brass/Gold over Nickel
Material: Nylon 6T,UL94V-0(Black)

Ordering Information & Dimensions

Circuits	Dim(mm)		Circuits	Dim(mm)		Circuits	Dim(mm)	
	A	B		A	B		A	B
1P	----	1.27	18P	21.59	22.86	35P	43.18	44.46
2P	1.27	2.54	19P	22.86	24.13	36P	44.45	45.72
3P	2.54	3.81	20P	24.13	25.40	37P	45.72	46.99
4P	3.81	5.08	21P	25.40	26.67	38P	46.99	48.26
5P	5.08	6.35	22P	26.67	27.94	39P	48.26	49.53
6P	6.35	7.62	23P	27.94	29.21	40P	49.53	50.80
7P	7.62	8.89	24P	29.21	30.48	41P	50.80	52.07
8P	8.89	10.16	25P	30.48	31.75	42P	52.07	53.34
9P	10.16	11.43	26P	31.75	33.02	43P	53.34	54.61
10P	11.43	12.70	27P	33.02	34.29	44P	54.61	55.88
11P	12.70	13.97	28P	34.29	35.56	45P	55.88	57.15
12P	13.97	15.24	29P	35.56	36.83	46P	57.15	58.42
13P	15.24	16.51	30P	36.83	38.10	47P	58.42	59.69
14P	16.51	17.78	31P	38.10	39.37	48P	59.69	60.96
15P	17.78	19.05	32P	39.37	40.64	49P	60.96	62.23
16P	19.05	20.32	33P	40.64	41.91	50P	62.23	63.50
17P	20.32	21.59	34P	41.91	43.18			

深圳市华德共创科技有限公司
Shenzhen Huade co-create Technology Co.,LTD
TEL：0755-27129737 FAX：0755-29940187

-TOLERANCES- UNLESS OTHERWISE SPECIFIED 公差参数表						TITLE: 产品名称：	1.27mm Pitch 90 ° Wafer		
X.X	±0.30	X.X°	±3°	APPD: 核准：	XIE	PART NO: 产品编号：	HDGC1276WR-XP		
X.XX	±0.30	X.XX°	±2°	CHECK: 校对：	WANG	DATE	SCALE	UNIT	CODE NUMBER
X.XXX	±0.10	X.XXX°	±1°	DRAW: 绘图：	WANG	2014-07-25	5:1	mm	A008

修订 REV	标记 MARK	修改摘要 REVISION DESCRIPTION	签名 SIGNA TURE	日期 DATE
A0		NEW RELEEASE	WANG	2014-07-25

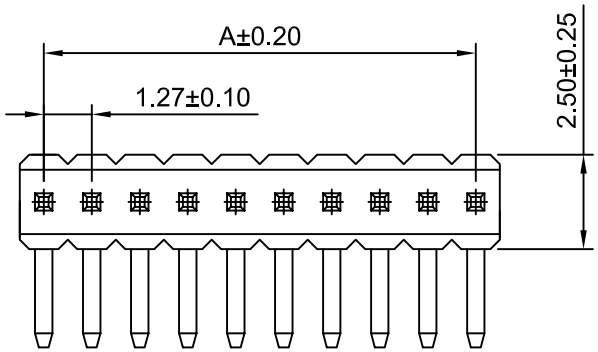

Ordering Information:

HDGC1276WR-XP-R - *** - ***
1 2 3

1.Part No.
2.Size(H):
(Blank):2.50mm
H17:1.70mm
3.Material:
(Blank):Nylon 6T,UL94V-0
GWT :Nylon 6T,UL94V-0 GWT 750℃

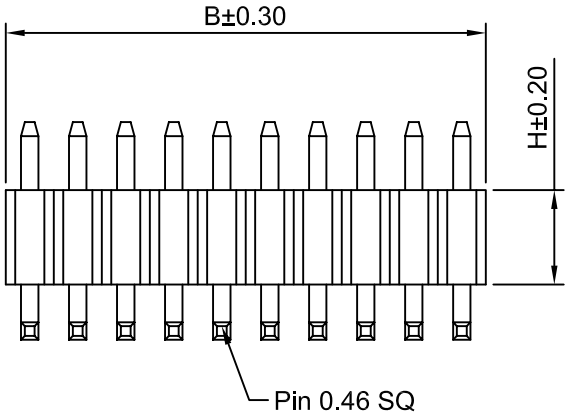

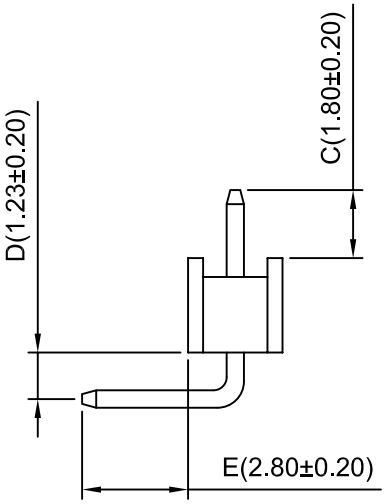

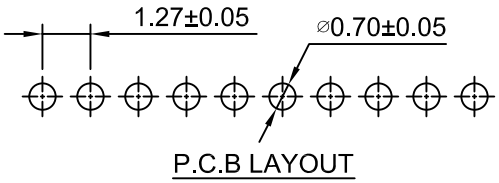

SPECIFICATIONS:

Current Rating:1A AC,DC
Voltage Rating: 30V AC,DC
Temperature Range: -25°C ~ +85°C
Contact Resistance: 20mΩ Max
Insulation Resistance: 1000MΩ Min
Withstanding Voltage: 500V AC/minute
Pin Material:Brass/Gold over Nickel
Material: Nylon 6T,UL94V-0(Black)

Ordering Information & Dimensions

Circuits	Dim(mm)		Circuits	Dim(mm)		Circuits	Dim(mm)	
	A	B		A	B		A	B
1P	----	1.27	18P	21.59	22.86	35P	43.18	44.46
2P	1.27	2.54	19P	22.86	24.13	36P	44.45	45.72
3P	2.54	3.81	20P	24.13	25.40	37P	45.72	46.99
4P	3.81	5.08	21P	25.40	26.67	38P	46.99	48.26
5P	5.08	6.35	22P	26.67	27.94	39P	48.26	49.53
6P	6.35	7.62	23P	27.94	29.21	40P	49.53	50.80
7P	7.62	8.89	24P	29.21	30.48	41P	50.80	52.07
8P	8.89	10.16	25P	30.48	31.75	42P	52.07	53.34
9P	10.16	11.43	26P	31.75	33.02	43P	53.34	54.61
10P	11.43	12.70	27P	33.02	34.29	44P	54.61	55.88
11P	12.70	13.97	28P	34.29	35.56	45P	55.88	57.15
12P	13.97	15.24	29P	35.56	36.83	46P	57.15	58.42
13P	15.24	16.51	30P	36.83	38.10	47P	58.42	59.69
14P	16.51	17.78	31P	38.10	39.37	48P	59.69	60.96
15P	17.78	19.05	32P	39.37	40.64	49P	60.96	62.23
16P	19.05	20.32	33P	40.64	41.91	50P	62.23	63.50
17P	20.32	21.59	34P	41.91	43.18			

深圳市华德共创科技有限公司
Shenzhen Huade co-create Technology Co.,LTD
TEL：0755-27129737 FAX：0755-29940187

-TOLERANCES- UNLESS OTHERWISE SPECIFIED 公差参数表						TITLE: 产品名称：	1.27mm Pitch 90 ° Wafer		
X.X	±0.30	X.X°	±3°	APPD: 核准：	XIE	PART NO: 产品编号：	HDGC1276WR-XP-R		
X.XX	±0.30	X.XX°	±2°	CHECK: 校对：	WANG	DATE	SCALE	UNIT	CODE NUMBER
X.XXX	±0.10	X.XXX°	±1°	DRAW: 绘图：	WANG	2014-07-25	5:1	mm	A008

修订 REV	标记 MARK	修改摘要 REVISION DESCRIPTION	签名 SIGNA TURE	日期 DATE
A0		NEW RELEEASE	WANG	2017-10-25

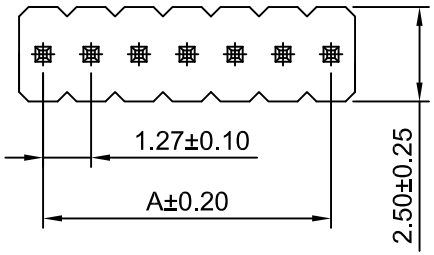

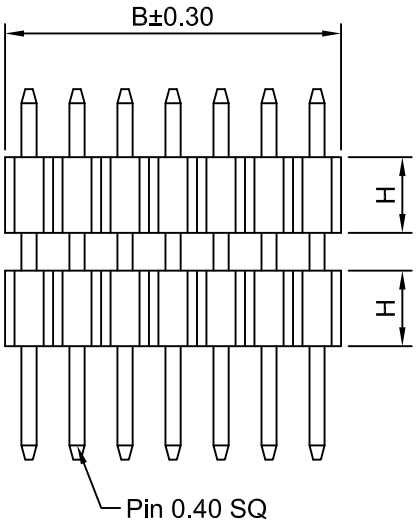

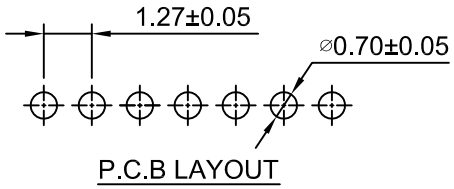

P.C.B LAYOUT

Ordering Information:

HDGC1276WVA-XP - *** - *** - ***
1 2 3 4

1.Part No.
2.Size(H):
(Blank):1.00mm
H15:1.50mm
H17:1.70mm
H20:2.00mm
H25:2.50mm
3.Material:
(Blank):Nylon 6T,UL94V-0
GWT :Nylon 6T,UL94V-0 GWT 750℃
4.Finish:
(Blank):Gold over Nickel
G15 :Gold over Nickel(Au:15u")
G30 :Gold over Nickel(Au:30u")
T :Tin over Nickel

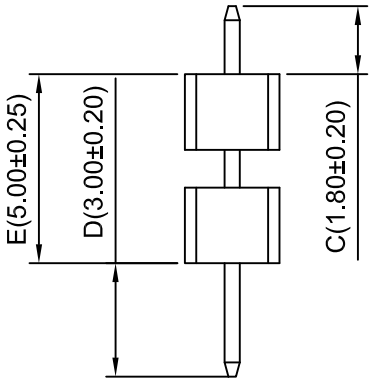

SPECIFICATIONS:

Current Rating:1A AC,DC
Voltage Rating: 30V AC,DC
Temperature Range: -25°C ~ +85°C
Contact Resistance: 20mΩ Max
Insulation Resistance: 1000MΩ Min
Withstanding Voltage: 500V AC/minute
Pin Material:Brass/Gold over Nickel
Material: Nylon 6T,UL94V-0(Black)

Ordering Information & Dimensions

Circuits	Dim(mm)		Circuits	Dim(mm)		Circuits	Dim(mm)	
	A	B		A	B		A	B
1P	----	1.27	18P	21.59	22.86	35P	43.18	44.46
2P	1.27	2.54	19P	22.86	24.13	36P	44.45	45.72
3P	2.54	3.81	20P	24.13	25.40	37P	45.72	46.99
4P	3.81	5.08	21P	25.40	26.67	38P	46.99	48.26
5P	5.08	6.35	22P	26.67	27.94	39P	48.26	49.53
6P	6.35	7.62	23P	27.94	29.21	40P	49.53	50.80
7P	7.62	8.89	24P	29.21	30.48	41P	50.80	52.07
8P	8.89	10.16	25P	30.48	31.75	42P	52.07	53.34
9P	10.16	11.43	26P	31.75	33.02	43P	53.34	54.61
10P	11.43	12.70	27P	33.02	34.29	44P	54.61	55.88
11P	12.70	13.97	28P	34.29	35.56	45P	55.88	57.15
12P	13.97	15.24	29P	35.56	36.83	46P	57.15	58.42
13P	15.24	16.51	30P	36.83	38.10	47P	58.42	59.69
14P	16.51	17.78	31P	38.10	39.37	48P	59.69	60.96
15P	17.78	19.05	32P	39.37	40.64	49P	60.96	62.23
16P	19.05	20.32	33P	40.64	41.91	50P	62.23	63.50
17P	20.32	21.59	34P	41.91	43.18			

深圳市华德共创科技有限公司
Shenzhen Huade co-create Technology Co.,LTD
TEL：0755-27129737 FAX：0755-29940187

-TOLERANCES- UNLESS OTHERWISE SPECIFIED 公差参数表						TITLE: 产品名称：	1.27mm Pitch 180 ° Wafer		
X.X	±0.30	X.X°	±3°	APPD: 核准：	XIE	PART NO: 产品编号：	HDGC1276WVA-XP		
X.XX	±0.30	X.XX°	±2°	CHECK: 校对：	WANG	DATE	SCALE	UNIT	CODE NUMBER
X.XXX	±0.10	X.XXX°	±1°	DRAW: 绘图：	WANG	2017-10-25	5:1	mm	A008

修订 REV	标记 MARK	修改摘要 REVISION DESCRIPTION	签名 SIGNA TURE	日期 DATE
A0		NEW RELEEASE	WANG	2017-10-25

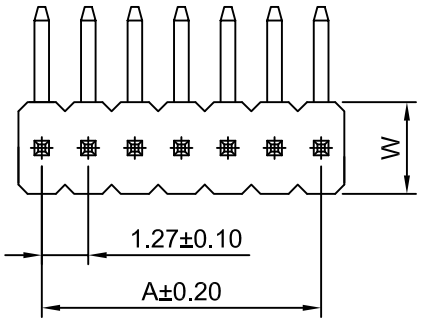

Ordering Information:

HDGC1276WRA-XP - *** - ***
1 2 3

1.Part No.
2.Size(H):
(Blank):1.00mm(W:2.10mm,P:Pin 0.40 SQ)
H15:1.50mm(W:2.40mm,P:Pin 0.40 SQ)
H17:1.70mm(W:2.50mm,P:Pin 0.46 SQ)
H20:2.00mm(W:2.50mm,P:Pin 0.40 SQ)
H25:2.50mm(W:2.50mm,P:Pin 0.40 SQ)
3.Material:
(Blank):Nylon 6T,UL94V-0
GWT :Nylon 6T,UL94V-0 GWT 750℃

SPECIFICATIONS:

Current Rating:1A AC,DC
Voltage Rating: 30V AC,DC
Temperature Range: -25°C ~ +85°C
Contact Resistance: 20mΩ Max
Insulation Resistance: 1000MΩ Min
Withstanding Voltage: 500V AC/minute
Pin Material:Brass/Gold over Nickel
Material: Nylon 6T,UL94V-0(Black)

Ordering Information & Dimensions

Circuits	Dim(mm)		Circuits	Dim(mm)		Circuits	Dim(mm)	
	A	B		A	B		A	B
1P	----	1.27	18P	21.59	22.86	35P	43.18	44.46
2P	1.27	2.54	19P	22.86	24.13	36P	44.45	45.72
3P	2.54	3.81	20P	24.13	25.40	37P	45.72	46.99
4P	3.81	5.08	21P	25.40	26.67	38P	46.99	48.26
5P	5.08	6.35	22P	26.67	27.94	39P	48.26	49.53
6P	6.35	7.62	23P	27.94	29.21	40P	49.53	50.80
7P	7.62	8.89	24P	29.21	30.48	41P	50.80	52.07
8P	8.89	10.16	25P	30.48	31.75	42P	52.07	53.34
9P	10.16	11.43	26P	31.75	33.02	43P	53.34	54.61
10P	11.43	12.70	27P	33.02	34.29	44P	54.61	55.88
11P	12.70	13.97	28P	34.29	35.56	45P	55.88	57.15
12P	13.97	15.24	29P	35.56	36.83	46P	57.15	58.42
13P	15.24	16.51	30P	36.83	38.10	47P	58.42	59.69
14P	16.51	17.78	31P	38.10	39.37	48P	59.69	60.96
15P	17.78	19.05	32P	39.37	40.64	49P	60.96	62.23
16P	19.05	20.32	33P	40.64	41.91	50P	62.23	63.50
17P	20.32	21.59	34P	41.91	43.18			

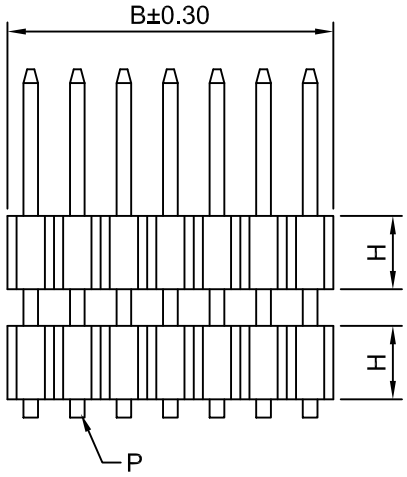

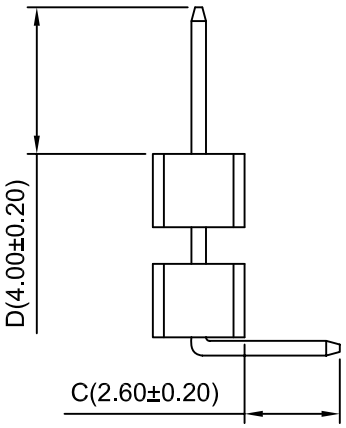

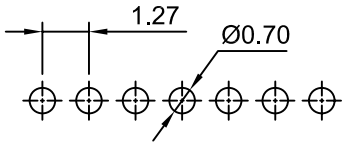

P.C.B LAYOUT

深圳市华德共创科技有限公司
Shenzhen Huade co-create Technology Co.,LTD
TEL：0755-27129737 FAX：0755-29940187

-TOLERANCES- UNLESS OTHERWISE SPECIFIED 公差参数表						TITLE: 产品名称：	1.27mm Pitch 90 ° Wafer		
X.X	±0.30	X.X°	±3°	APPD: 核准：	XIE	PART NO: 产品编号：	HDGC1276WRA-XP		
X.XX	±0.30	X.XX°	±2°	CHECK: 校对：	WANG	DATE	SCALE	UNIT	CODE NUMBER
X.XXX	±0.10	X.XXX°	±1°	DRAW: 绘图：	WANG	2017-10-25	5:1	mm	A008

修订 REV	标记 MARK	修改摘要 REVISION DESCRIPTION	签名 SIGNA TURE	日期 DATE
A0		NEW RELEEASE	WANG	2014-07-25

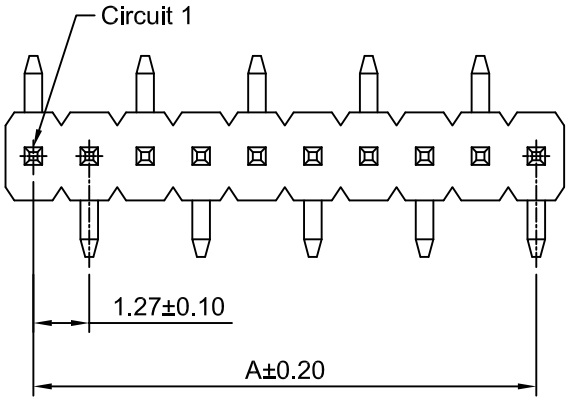

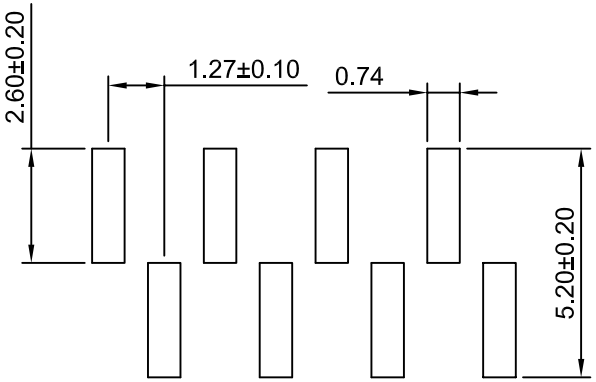

P.C.B LAYOUT

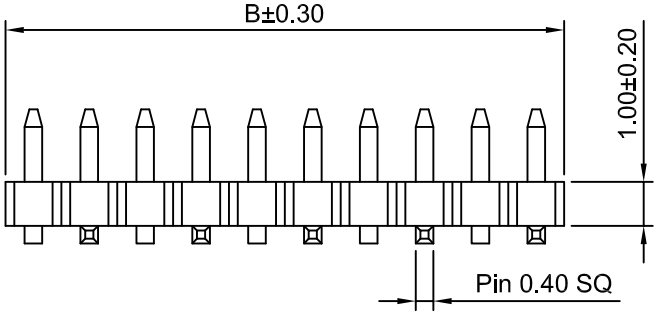

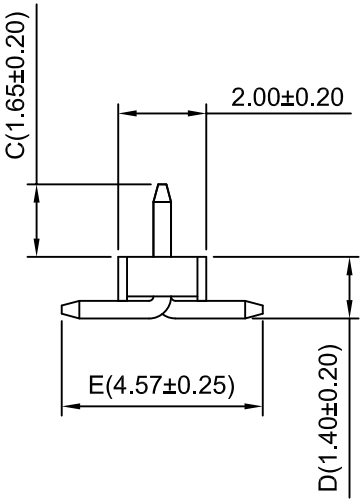

SPECIFICATIONS:

Current Rating: 1.0A AC,DC
Voltage Rating: 30V AC,DC
Temperature Range: -25°C ~ +85°C
Contact Resistance: 20mΩ Max
Insulation Resistance: 1000MΩ Min
Withstanding Voltage: 500V AC/minute
Pin Material: Brass/Gold over Nickel
Material: Nylon 6T,UL94V-0(Black)

Ordering Information & Dimensions

Circuits	Dim(mm)		Circuits	Dim(mm)		Circuits	Dim(mm)	
	A	B		A	B		A	B
2P	1.27	2.54	19P	22.86	24.13	36P	44.45	45.72
3P	2.54	3.81	20P	24.13	25.40	37P	45.72	46.99
4P	3.81	5.08	21P	25.40	26.67	38P	46.99	48.26
5P	5.08	6.35	22P	26.67	27.94	39P	48.26	49.53
6P	6.35	7.62	23P	27.94	29.21	40P	49.53	50.80
7P	7.62	8.89	24P	29.21	30.48	41P	50.80	52.07
8P	8.89	10.16	25P	30.48	31.75	42P	52.07	53.34
9P	10.16	11.43	26P	31.75	33.02	43P	53.34	54.61
10P	11.43	12.70	27P	33.02	34.29	44P	54.61	55.88
11P	12.70	13.97	28P	34.29	35.56	45P	55.88	57.15
12P	13.97	15.24	29P	35.56	36.83	46P	57.15	58.42
13P	15.24	16.51	30P	36.83	38.10	47P	58.42	59.69
14P	16.51	17.78	31P	38.10	39.37	48P	59.69	60.96
15P	17.78	19.05	32P	39.37	40.64	49P	60.96	62.23
16P	19.05	20.32	33P	40.64	41.91	50P	62.23	63.50
17P	20.32	21.59	34P	41.91	43.18			
18P	21.59	22.86	35P	43.18	44.46			

深圳市华德共创科技有限公司
Shenzhen Huade co-create Technology Co.,LTD
TEL：0755-27129737 FAX：0755-29940187

-TOLERANCES- UNLESS OTHERWISE SPECIFIED 公差参数表						TITLE: 产品名称：	1.27mm Pitch 180 ° Pin Header		
X.X	±0.30	X.X°	±3°	APPD: 核准：	XIE	PART NO: 产品编号：	HDGC1276WV-S-XP-A		
X.XX	±0.30	X.XX°	±2°	CHECK: 校对：	WANG	DATE	SCALE	UNIT	CODE NUMBER
X.XXX	±0.10	X.XXX°	±1°	DRAW: 绘图：	WANG	2014-07-25	6:1	mm	A008

修订 REV	标记 MARK	修改摘要 REVISION DESCRIPTION	签名 SIGNA TURE	日期 DATE
A0		NEW RELEEASE	WANG	2014-07-25

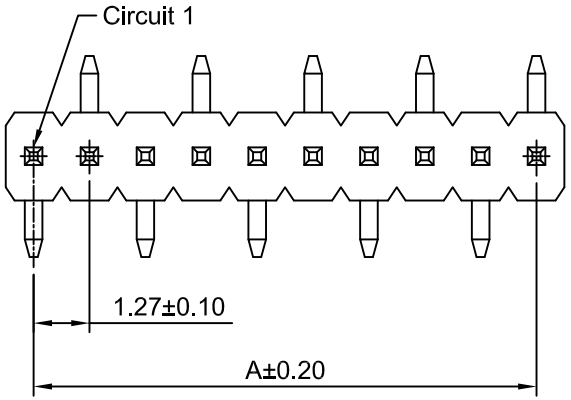

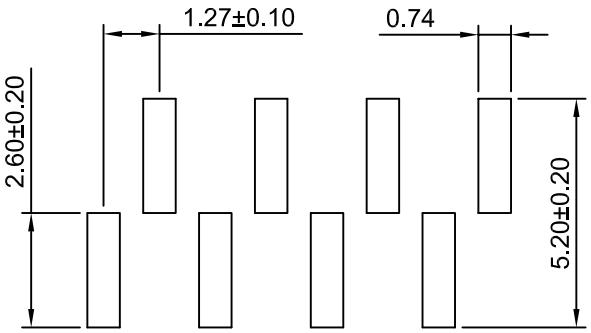

P.C.B LAYOUT

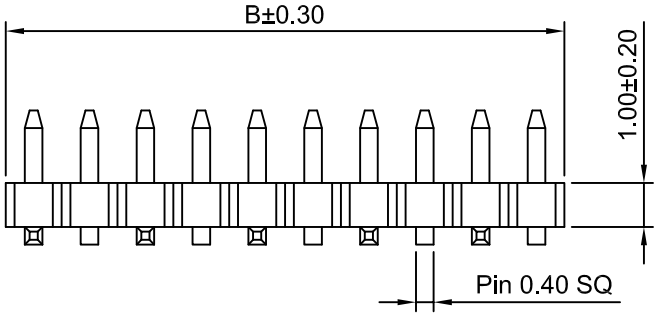

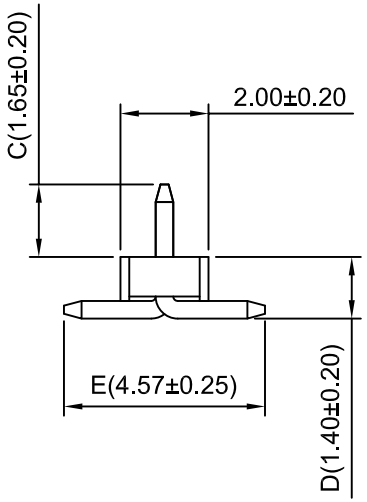

SPECIFICATIONS:

Current Rating: 1.0A AC,DC
Voltage Rating: 30V AC,DC
Temperature Range: -25°C ~ +85°C
Contact Resistance: 20mΩ Max
Insulation Resistance: 1000MΩ Min
Withstanding Voltage: 500V AC/minute
Pin Material: Brass/Gold over Nickel
Material: Nylon 6T,UL94V-0(Black)

Ordering Information & Dimensions

Circuits	Dim(mm)		Circuits	Dim(mm)		Circuits	Dim(mm)	
	A	B		A	B		A	B
2P	1.27	2.54	19P	22.86	24.13	36P	44.45	45.72
3P	2.54	3.81	20P	24.13	25.40	37P	45.72	46.99
4P	3.81	5.08	21P	25.40	26.67	38P	46.99	48.26
5P	5.08	6.35	22P	26.67	27.94	39P	48.26	49.53
6P	6.35	7.62	23P	27.94	29.21	40P	49.53	50.80
7P	7.62	8.89	24P	29.21	30.48	41P	50.80	52.07
8P	8.89	10.16	25P	30.48	31.75	42P	52.07	53.34
9P	10.16	11.43	26P	31.75	33.02	43P	53.34	54.61
10P	11.43	12.70	27P	33.02	34.29	44P	54.61	55.88
11P	12.70	13.97	28P	34.29	35.56	45P	55.88	57.15
12P	13.97	15.24	29P	35.56	36.83	46P	57.15	58.42
13P	15.24	16.51	30P	36.83	38.10	47P	58.42	59.69
14P	16.51	17.78	31P	38.10	39.37	48P	59.69	60.96
15P	17.78	19.05	32P	39.37	40.64	49P	60.96	62.23
16P	19.05	20.32	33P	40.64	41.91	50P	62.23	63.50
17P	20.32	21.59	34P	41.91	43.18			
18P	21.59	22.86	35P	43.18	44.46			

HDGC 深圳市华德共创科技有限公司
Shenzhen Huade co-create Technology Co.,LTD
TEL：0755-27129737 FAX：0755-29940187

-TOLERANCES- UNLESS OTHERWISE SPECIFIED 公差参数表						TITLE: 产品名称：	1.27mm Pitch 180 ° Pin Header		
X.X	±0.30	X.X°	±3°	APPD: 核准：	XIE	PART NO: 产品编号：	HDGC1276WV-S-XP-B		
X.XX	±0.30	X.XX°	±2°	CHECK: 校对：	WANG	DATE	SCALE	UNIT	CODE NUMBER
X.XXX	±0.10	X.XXX°	±1°	DRAW: 绘图：	WANG	2014-07-25	6:1	mm	A008

修订 REV	标记 MARK	修改摘要 REVISION DESCRIPTION	签名 SIGNA TURE	日期 DATE
A0		NEW RELEEASE	WANG	2016-12-15

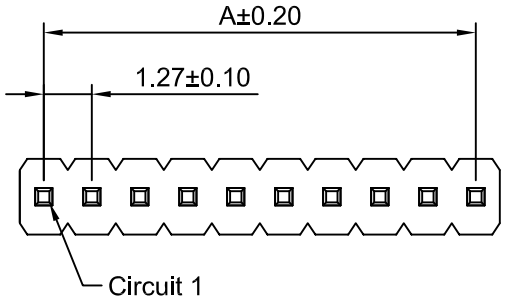

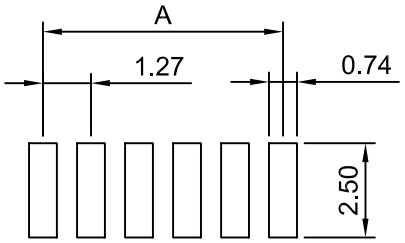

P.C.B LAYOUT

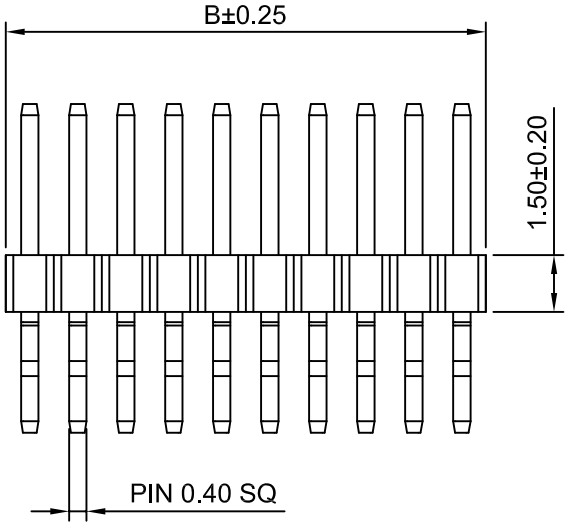

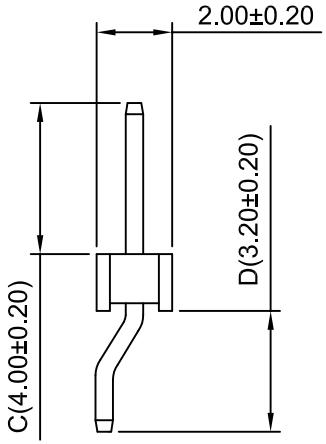

SPECIFICATIONS:

Current Rating: 1.0A AC,DC
Voltage Rating: 30V AC,DC
Temperature Range: -25°C ~ +85°C
Contact Resistance: 20mΩ Max
Insulation Resistance: 1000MΩ Min
Withstanding Voltage: 500V AC/minute
Pin Material: Brass/Gold over Nickel
Material: Nylon 6T,UL94V-0(Black)

Ordering Information & Dimensions

Circuits	Dim(mm)		Circuits	Dim(mm)		Circuits	Dim(mm)	
	A	B		A	B		A	B
2P	1.27	2.54	19P	22.86	24.13	36P	44.45	45.72
3P	2.54	3.81	20P	24.13	25.40	37P	45.72	46.99
4P	3.81	5.08	21P	25.40	26.67	38P	46.99	48.26
5P	5.08	6.35	22P	26.67	27.94	39P	48.26	49.53
6P	6.35	7.62	23P	27.94	29.21	40P	49.53	50.80
7P	7.62	8.89	24P	29.21	30.48	41P	50.80	52.07
8P	8.89	10.16	25P	30.48	31.75	42P	52.07	53.34
9P	10.16	11.43	26P	31.75	33.02	43P	53.34	54.61
10P	11.43	12.70	27P	33.02	34.29	44P	54.61	55.88
11P	12.70	13.97	28P	34.29	35.56	45P	55.88	57.15
12P	13.97	15.24	29P	35.56	36.83	46P	57.15	58.42
13P	15.24	16.51	30P	36.83	38.10	47P	58.42	59.69
14P	16.51	17.78	31P	38.10	39.37	48P	59.69	60.96
15P	17.78	19.05	32P	39.37	40.64	49P	60.96	62.23
16P	19.05	20.32	33P	40.64	41.91	50P	62.23	63.50
17P	20.32	21.59	34P	41.91	43.18			
18P	21.59	22.86	35P	43.18	44.46			

深圳市华德共创科技有限公司
Shenzhen Huade co-create Technology Co.,LTD
TEL：0755-27129737 FAX：0755-29940187

-TOLERANCES- UNLESS OTHERWISE SPECIFIED 公差参数表						TITLE: 产品名称：	1.27mm Pitch 90 ° Pin Header		
X.X	±0.30	X.X°	±3°	APPD: 核准：	XIE	PART NO: 产品编号：	HDGC1276WR-S-XP		
X.XX	±0.30	X.XX°	±2°	CHECK: 校对：	WANG	DATE	SCALE	UNIT	CODE NUMBER
X.XXX	±0.10	X.XXX°	±1°	DRAW: 绘图：	WANG	2016-12-15	5:1	mm	A008

修订 REV	标记 MARK	修改摘要 REVISION DESCRIPTION	签名 SIGNA TURE	日期 DATE
A0		NEW RELEEASE	WANG	2017-10-25

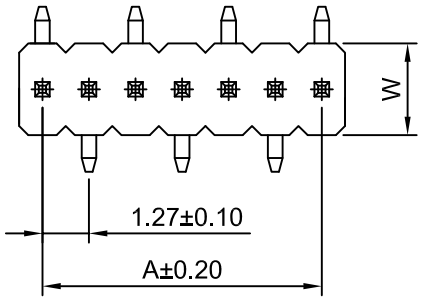

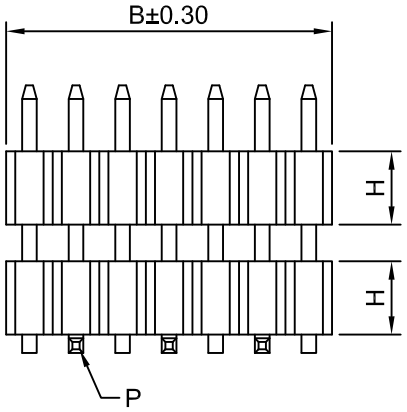

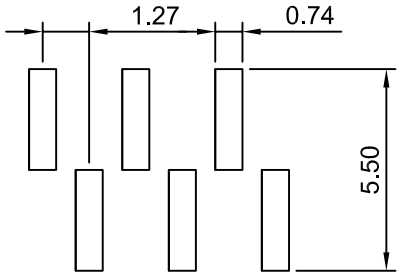

P.C.B LAYOUT

Ordering Information:

HDGC1276WVA-XP-A - *** - ***
1 2 3

1.Part No.
2.Size(H):
(Blank):1.00mm(W:2.10mm,P:Pin 0.40 SQ)
H15:1.50mm(W:2.40mm,P:Pin 0.40 SQ)
H17:1.70mm(W:2.50mm,P:Pin 0.46 SQ)
H20:2.00mm(W:2.50mm,P:Pin 0.40 SQ)
H25:2.50mm(W:2.50mm,P:Pin 0.40 SQ)
3.Material:
(Blank):Nylon 6T,UL94V-0
GWT :Nylon 6T,UL94V-0 GWT 750℃

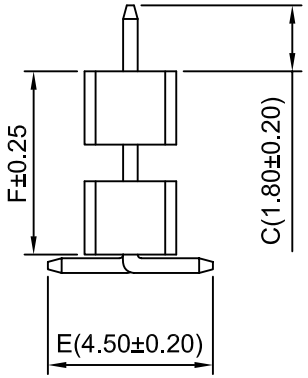

SPECIFICATIONS:

Current Rating:1A AC,DC
Voltage Rating: 30V AC,DC
Temperature Range: -25°C ~ +85°C
Contact Resistance: 20mΩ Max
Insulation Resistance: 1000MΩ Min
Withstanding Voltage: 500V AC/minute
Pin Material:Brass/Gold over Nickel
Material: Nylon 6T,UL94V-0(Black)

Ordering Information & Dimensions

Circuits	Dim(mm)		Circuits	Dim(mm)		Circuits	Dim(mm)	
	A	B		A	B		A	B
2P	1.27	2.54	19P	22.86	24.13	35P	43.18	44.46
3P	2.54	3.81	20P	24.13	25.40	36P	44.45	45.72
4P	3.81	5.08	21P	25.40	26.67	37P	45.72	46.99
5P	5.08	6.35	22P	26.67	27.94	38P	46.99	48.26
6P	6.35	7.62	23P	27.94	29.21	39P	48.26	49.53
7P	7.62	8.89	24P	29.21	30.48	40P	49.53	50.80
8P	8.89	10.16	25P	30.48	31.75	41P	50.80	52.07
9P	10.16	11.43	26P	31.75	33.02	42P	52.07	53.34
10P	11.43	12.70	27P	33.02	34.29	43P	53.34	54.61
11P	12.70	13.97	28P	34.29	35.56	44P	54.61	55.88
12P	13.97	15.24	29P	35.56	36.83	45P	55.88	57.15
13P	15.24	16.51	30P	36.83	38.10	46P	57.15	58.42
14P	16.51	17.78	31P	38.10	39.37	47P	58.42	59.69
15P	17.78	19.05	32P	39.37	40.64	48P	59.69	60.96
16P	19.05	20.32	33P	40.64	41.91	49P	60.96	62.23
17P	20.32	21.59	34P	41.91	43.18	50P	62.23	63.50
18P	21.59	22.86						

深圳市华德共创科技有限公司
Shenzhen Huade co-create Technology Co.,LTD
TEL：0755-27129737 FAX：0755-29940187

-TOLERANCES- UNLESS OTHERWISE SPECIFIED 公差参数表						TITLE: 产品名称：	1.27mm Pitch 180 ° Wafer		
X.X	±0.30	X.X°	±3°	APPD: 核准：	XIE	PART NO: 产品编号：	HDGC1276WVA-S-XP-A		
X.XX	±0.30	X.XX°	±2°	CHECK: 校对：	WANG	DATE	SCALE	UNIT	CODE NUMBER
X.XXX	±0.10	X.XXX°	±1°	DRAW: 绘图：	WANG	2017-10-25	5:1	mm	A008

修订 REV	标记 MARK	修改摘要 REVISION DESCRIPTION	签名 SIGNA TURE	日期 DATE
A0		NEW RELEEASE	WANG	2017-10-25

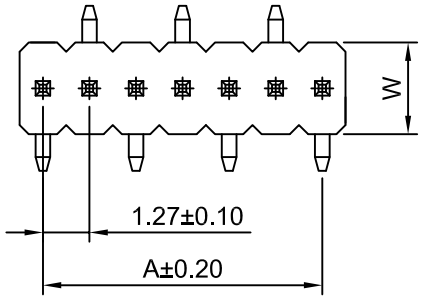

Ordering Information:

HDGC1276WVA-XP-B - *** - ***
1 2 3

1.Part No.
2.Size(H):
(Blank):1.00mm(W:2.10mm,P:Pin 0.40 SQ)
H15:1.50mm(W:2.40mm,P:Pin 0.40 SQ)
H17:1.70mm(W:2.50mm,P:Pin 0.46 SQ)
H20:2.00mm(W:2.50mm,P:Pin 0.40 SQ)
H25:2.50mm(W:2.50mm,P:Pin 0.40 SQ)
3.Material:
(Blank):Nylon 6T,UL94V-0
GWT :Nylon 6T,UL94V-0 GWT 750℃

SPECIFICATIONS:

Current Rating:1A AC,DC
Voltage Rating: 30V AC,DC
Temperature Range: -25°C ~ +85°C
Contact Resistance: 20mΩ Max
Insulation Resistance: 1000MΩ Min
Withstanding Voltage: 500V AC/minute
Pin Material:Brass/Gold over Nickel
Material: Nylon 6T,UL94V-0(Black)

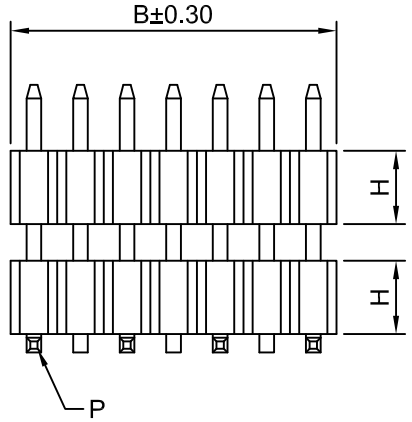

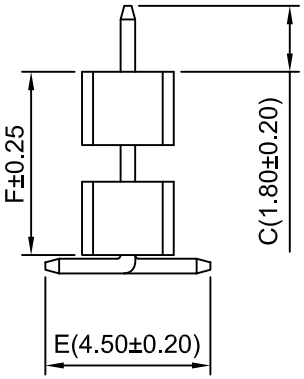

Ordering Information & Dimensions

Circuits	Dim(mm)		Circuits	Dim(mm)		Circuits	Dim(mm)	
	A	B		A	B		A	B
2P	1.27	2.54	19P	22.86	24.13	35P	43.18	44.46
3P	2.54	3.81	20P	24.13	25.40	36P	44.45	45.72
4P	3.81	5.08	21P	25.40	26.67	37P	45.72	46.99
5P	5.08	6.35	22P	26.67	27.94	38P	46.99	48.26
6P	6.35	7.62	23P	27.94	29.21	39P	48.26	49.53
7P	7.62	8.89	24P	29.21	30.48	40P	49.53	50.80
8P	8.89	10.16	25P	30.48	31.75	41P	50.80	52.07
9P	10.16	11.43	26P	31.75	33.02	42P	52.07	53.34
10P	11.43	12.70	27P	33.02	34.29	43P	53.34	54.61
11P	12.70	13.97	28P	34.29	35.56	44P	54.61	55.88
12P	13.97	15.24	29P	35.56	36.83	45P	55.88	57.15
13P	15.24	16.51	30P	36.83	38.10	46P	57.15	58.42
14P	16.51	17.78	31P	38.10	39.37	47P	58.42	59.69
15P	17.78	19.05	32P	39.37	40.64	48P	59.69	60.96
16P	19.05	20.32	33P	40.64	41.91	49P	60.96	62.23
17P	20.32	21.59	34P	41.91	43.18	50P	62.23	63.50
18P	21.59	22.86						

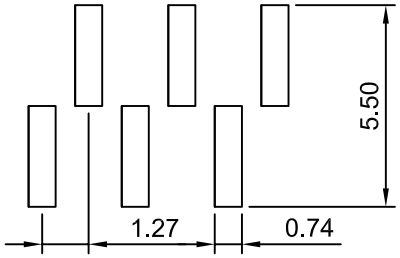

P.C.B LAYOUT

深圳市华德共创科技有限公司
Shenzhen Huade co-create Technology Co.,LTD
TEL：0755-27129737 FAX：0755-29940187

-TOLERANCES- UNLESS OTHERWISE SPECIFIED 公差参数表						TITLE: 产品名称：	1.27mm Pitch 180 ° Wafer		
X.X	±0.30	X.X°	±3°	APPD: 核准：	XIE	PART NO: 产品编号：	HDGC1276WVA-S-XP-B		
X.XX	±0.30	X.XX°	±2°	CHECK: 校对：	WANG	DATE	SCALE	UNIT	CODE NUMBER
X.XXX	±0.10	X.XXX°	±1°	DRAW: 绘图：	WANG	2017-10-25	5:1	mm	A008

修订 REV	标记 MARK	修改摘要 REVISION DESCRIPTION	签名 SIGNA TURE	日期 DATE
A0		NEW RELEEASE	WANG	2014-08-11

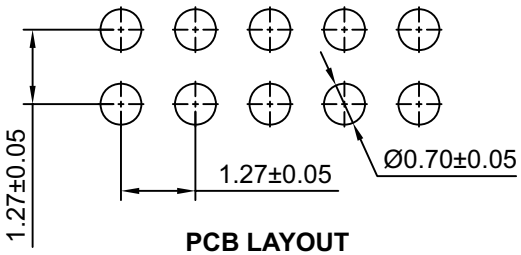

PCB LAYOUT

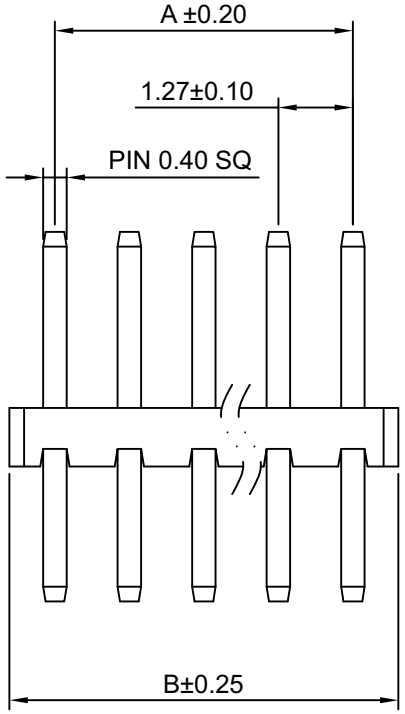

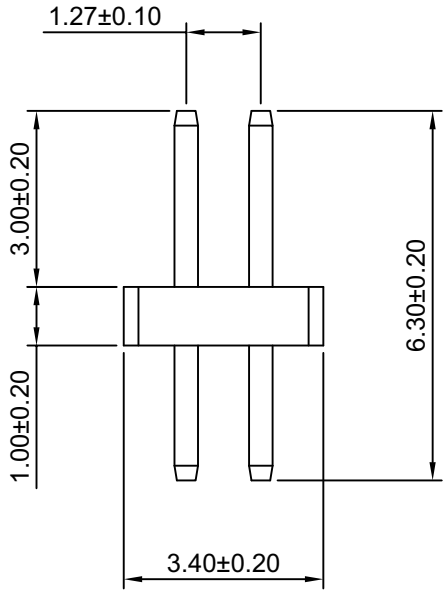

SPECIFICATIONS:

Current Rating: 1A AC,DC
Voltage Rating: 50V AC,DC
Temperature Range: -25°C ~ +85°C
Contact Resistance: 20MΩ Max.
Insulation Resistance: 1000MΩ Min.
Withstanding Voltage: 500V AC/minute
Pin Material: Brass/Tin over Nickel
Material: PBT,UL94V-0(Black)

Ordering Information & Dimensions

Circuits	Dimensions(mm)		Circuits	Dimensions(mm)	
	A	B		A	B
2x4P	3.81	5.08	2x13P	15.24	16.51
2x5P	5.08	6.35	2x14P	16.51	17.78
2x6P	6.35	7.62	2x15P	17.78	19.05
2x7P	7.62	8.89	2x16P	19.05	20.32
2x8P	8.89	10.16	2x17P	20.32	21.59
2x9P	10.16	11.43	2x18P	21.59	22.86
2x10P	11.43	12.70	2x19P	22.86	24.13
2x11P	12.70	13.97	2x20P	24.13	25.40
2x12P	13.97	15.24			

深圳市华德共创科技有限公司
Shenzhen Huade co-create Technology Co.,LTD
TEL：0755-27129737 FAX：0755-29940187

-TOLERANCES- UNLESS OTHERWISE SPECIFIED 公差参数表						TITLE: 产品名称：	1.27mm Pitch 180 ° Wafer		
X.X	±0.30	X.X°	±3°	APPD: 核准：	XIE	PART NO: 产品编号：	HDGC1276WV-2xXP		
X.XX	±0.30	X.XX°	±2°	CHECK: 校对：	WANG	DATE	SCALE	UNIT	CODE NUMBER
X.XXX	±0.10	X.XXX°	±1°	DRAW: 绘图：	WANG	2014-08-11	8:1	mm	A008

修订 REV	标记 MARK	修改摘要 REVISION DESCRIPTION	签名 SIGNA TURE	日期 DATE
A0		NEW RELEEASE	WANG	2015-12-11

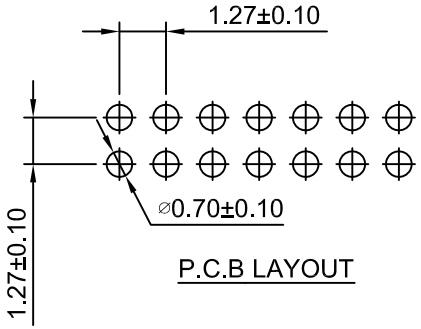

P.C.B LAYOUT

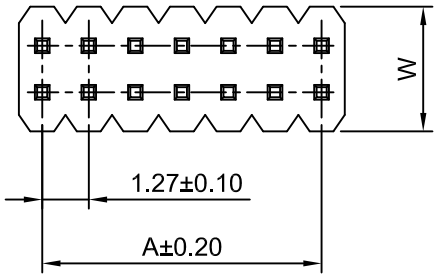

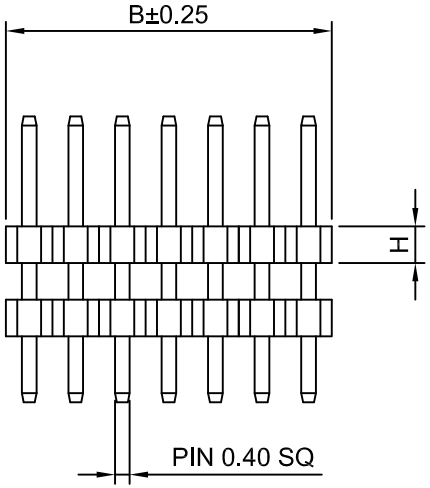

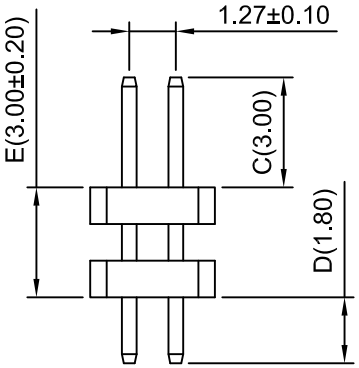

Ordering Information:

HDGC1276WVA-2xXP - *** - *** - ***
(1 = HDGC1276WVA-2xXP, 2 = ***, 3 = ***, 4 = ***)

1.Part No.
2.Size(H):
(Blank):1.00mm(W:3.40mm)
H15:1.50mm(W:3.40mm)
H20:2.00mm(W:3.00mm)
H25:2.50mm(W:3.00mm)
3.Material:
(Blank):Nylon 6T,UL94V-0
GWT:Nylon 6T,UL94V-0,GWT 750℃
4.Finish:
(Blank):Gold over Nickel
G15 :Gold over Nickel(Au:15u")
G30 :Gold over Nickel(Au:30u")
T :Tin over Nickel

SPECIFICATIONS:

Current Rating: 1.0A AC,DC
Voltage Rating: 250V AC,DC
Temperature Range: -25°C ~ +85°C
Contact Resistance: 20mΩ Max
Insulation Resistance: 1000MΩ Min
Withstanding Voltage: 500V AC/minute
Pin Material: Brass/Gold over Nickel
Material: Nylon 6T,UL94V-0(Black)

Ordering Information & Dimensions

Circuits	Dim(mm)		Circuits	Dim(mm)		Circuits	Dim(mm)	
	A	B		A	B		A	B
2x2P	1.27	2.54	2x15P	17.78	19.05	2x28P	34.29	35.56
2x3P	2.54	3.81	2x16P	19.05	20.32	2x29P	35.56	36.83
2x4P	3.81	5.08	2x17P	20.32	21.59	2x30P	36.83	38.10
2x5P	5.08	6.35	2x18P	21.59	22.86	2x31P	38.10	39.37
2x6P	6.35	7.62	2x19P	22.86	24.13	2x32P	39.37	40.64
2x7P	7.62	8.89	2x20P	24.13	25.40	2x33P	40.64	41.91
2x8P	8.89	10.16	2x21P	25.40	26.67	2x34P	41.91	43.18
2x9P	10.16	11.43	2x22P	26.67	27.94	2x35P	43.18	44.45
2x10P	11.43	12.70	2x23P	27.94	29.21	2x36P	44.45	45.72
2x11P	12.70	13.97	2x24P	29.21	30.48	2x37P	45.72	46.99
2x12P	13.97	15.24	2x25P	30.48	31.75	2x38P	46.99	48.26
2x13P	15.24	16.51	2x26P	31.75	33.02	2x39P	48.26	49.53
2x14P	16.51	17.78	2x27P	33.02	34.29	2x40P	49.53	50.80

HDGC 深圳市华德共创科技有限公司
Shenzhen Huade co-create Technology Co.,LTD
TEL：0755-27129737 FAX：0755-29940187

-TOLERANCES- UNLESS OTHERWISE SPECIFIED 公差参数表						TITLE: 产品名称：	1.27mm Pitch 180 ° Wafer		
X.X	±0.30	X.X°	±3°	APPD: 核准：	XIE	PART NO: 产品编号：	HDGC1276WVA-2xXP		
X.XX	±0.30	X.XX°	±2°	CHECK: 校对：	WANG	DATE	SCALE	UNIT	CODE NUMBER
X.XXX	±0.10	X.XXX°	±1°	DRAW: 绘图：	WANG	2015-12-11	3:1	mm	A008

修订 REV	标记 MARK	修改摘要 REVISION DESCRIPTION	签名 SIGNA TURE	日期 DATE
A0		NEW RELEEASE	WANG	2014-08-25

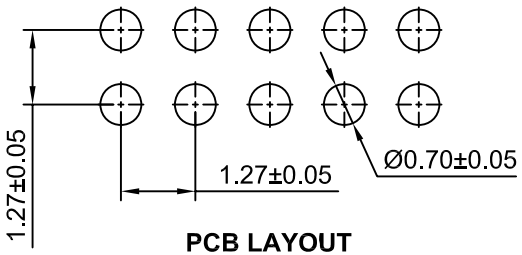

PCB LAYOUT

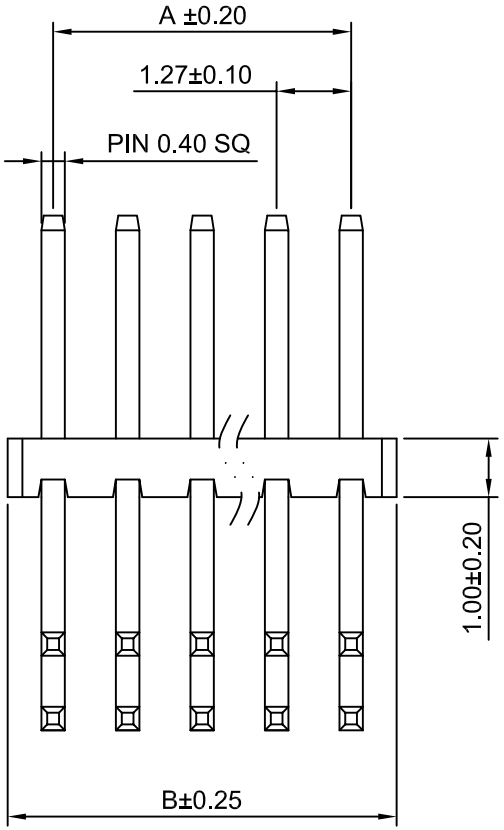

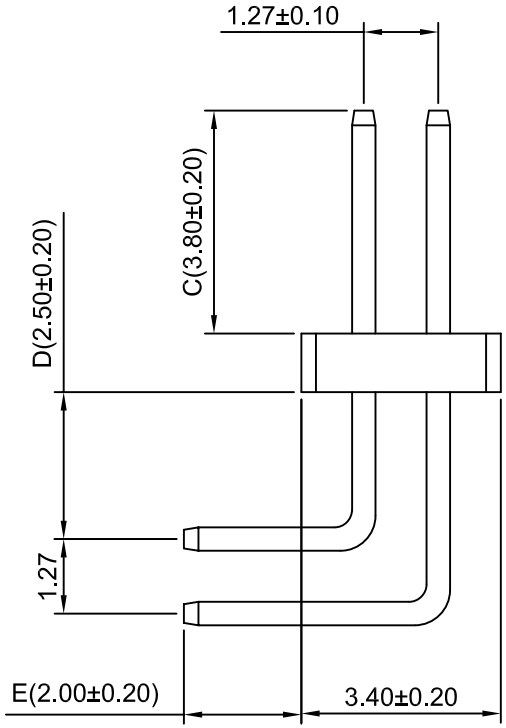

SPECIFICATIONS:

Current Rating: 1A AC,DC
Voltage Rating: 50V AC,DC
Temperature Range: -25°C ~ +85°C
Contact Resistance: 20MΩ Max.
Insulation Resistance: 1000MΩ Min.
Withstanding Voltage: 500V AC/minute
Pin Material: Brass/Tin over Nickel
Material: PBT,UL94V-0(Black)

Ordering Information & Dimensions

Circuits	Dimensions(mm)		Circuits	Dimensions(mm)	
	A	B		A	B
2x2P	1.27	2.54	2x12P	13.97	15.24
2x3P	2.54	3.81	2x13P	15.24	16.51
2x4P	3.81	5.08	2x14P	16.51	17.78
2x5P	5.08	6.35	2x15P	17.78	19.05
2x6P	6.35	7.62	2x16P	19.05	20.32
2x7P	7.62	8.89	2x17P	20.32	21.59
2x8P	8.89	10.16	2x18P	21.59	22.86
2x9P	10.16	11.43	2x19P	22.86	24.13
2x10P	11.43	12.70	2x20P	24.13	25.40
2x11P	12.70	13.97			

HDGC 深圳市华德共创科技有限公司
Shenzhen Huade co-create Technology Co.,LTD
TEL：0755-27129737 FAX：0755-29940187

-TOLERANCES- UNLESS OTHERWISE SPECIFIED 公差参数表						TITLE: 产品名称：	1.27mm Pitch 90°Pin Header		
X.X	±0.30	X.X°	±3°	APPD: 核准：	XIE	PART NO: 产品编号：	HDGC1276WR-2xXP		
X.XX	±0.30	X.XX°	±2°	CHECK: 校对：	WANG	DATE	SCALE	UNIT	CODE NUMBER
X.XXX	±0.10	X.XXX°	±1°	DRAW: 绘图：	WANG	2014-08-25	8:1	mm	A008

修订 REV	标记 MARK	修改摘要 REVISION DESCRIPTION	签名 SIGNA TURE	日期 DATE
A0		NEW RELEEASE	WANG	2015-11-26

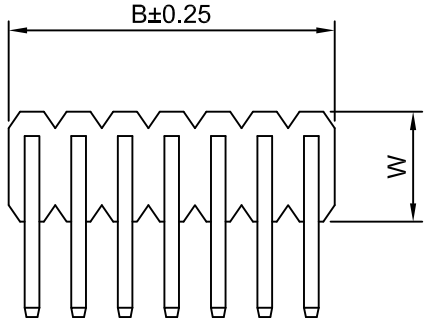

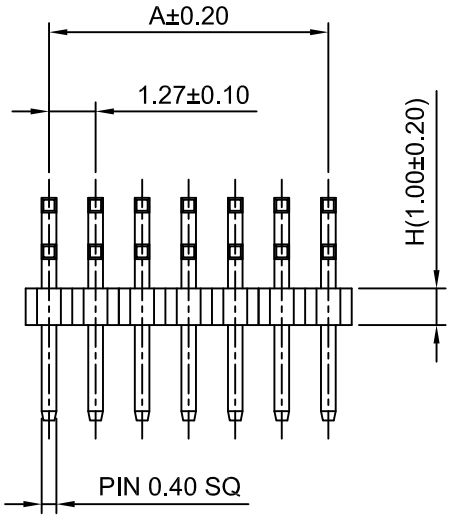

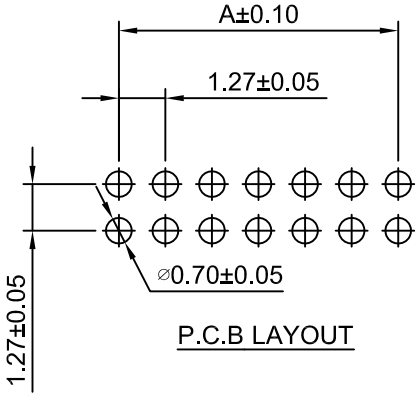

P.C.B LAYOUT

Ordering Information:

HDGC1276WRA-2xXP - *** - *** - ***
1 2 3 4

1.Part No.
2.Size(H):
(Blank):1.00mm(W:3.40mm)
H15:1.50mm(W:3.40mm)
H20:2.00mm(W:3.00mm)
H25:2.50mm(W:3.00mm)
3.Material:
(Blank):Nylon 6T,UL94V-0
GWT :Nylon 6T,UL94V-0 GWT 750℃
4.Finish:
(Blank):Gold over Nickel
T :Tin over Nickel

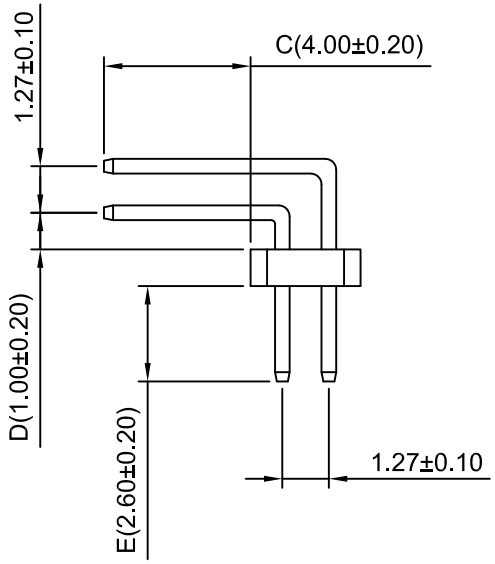

SPECIFICATIONS:

Current Rating: 1.0A AC,DC
Voltage Rating: 250V AC,DC
Temperature Range: -25°C ~ +85°C
Contact Resistance: 20mΩ Max
Insulation Resistance: 1000MΩ Min
Withstanding Voltage: 500V AC/minute
Pin Material:Brass/Gold over Nickel
Material:Nylon6T,UL94V-0(Black)

Ordering Information & Dimensions

Circuits	Dimensions (mm)		Circuits	Dimensions (mm)		Circuits	Dimensions (mm)	
	A	B		A	B		A	B
2x2P	1.27	2.54	2x15P	17.78	19.05	2x28P	34.29	35.56
2x3P	2.54	3.81	2x16P	19.05	20.32	2x29P	35.56	36.83
2x4P	3.81	5.08	2x17P	20.32	21.59	2x30P	36.83	38.10
2x5P	5.08	6.35	2x18P	21.59	22.86	2x31P	38.10	39.37
2x6P	6.35	7.62	2x19P	22.86	24.13	2x32P	39.37	40.64
2x7P	7.62	8.89	2x20P	24.13	25.40	2x33P	40.64	41.91
2x8P	8.89	10.16	2x21P	25.40	26.67	2x34P	41.91	43.18
2x9P	10.16	11.43	2x22P	26.67	27.94	2x35P	43.18	44.45
2x10P	11.43	12.70	2x23P	27.94	29.21	2x36P	44.45	45.72
2x11P	12.70	13.97	2x24P	29.21	30.48	2x37P	45.72	46.99
2x12P	13.97	15.24	2x25P	30.48	31.75	2x38P	46.99	48.26
2x13P	15.24	16.51	2x26P	31.75	33.02	2x39P	48.26	49.53
2x14P	16.51	17.78	2x27P	33.02	34.29	2x40P	49.53	50.80

深圳市华德共创科技有限公司
Shenzhen Huade co-create Technology Co.,LTD
TEL：0755-27129737 FAX：0755-29940187

-TOLERANCES- UNLESS OTHERWISE SPECIFIED 公差参数表						TITLE: 产品名称：	1.27mm Pitch 90 ° Pin Header		
X.X	±0.30	X.X°	±3°	APPD: 核准：	XIE	PART NO: 产品编号：	HDGC1276WRA-2xXP		
X.XX	±0.30	X.XX°	±2°	CHECK: 校对：	WANG	DATE	SCALE	UNIT	CODE NUMBER
X.XXX	±0.10	X.XXX°	±1°	DRAW: 绘图：	WANG	2015-11-26	5:1	mm	A008

修订 REV	标记 MARK	修改摘要 REVISION DESCRIPTION	签名 SIGNA TURE	日期 DATE
A0		NEW RELEEASE	WANG	2014-07-25

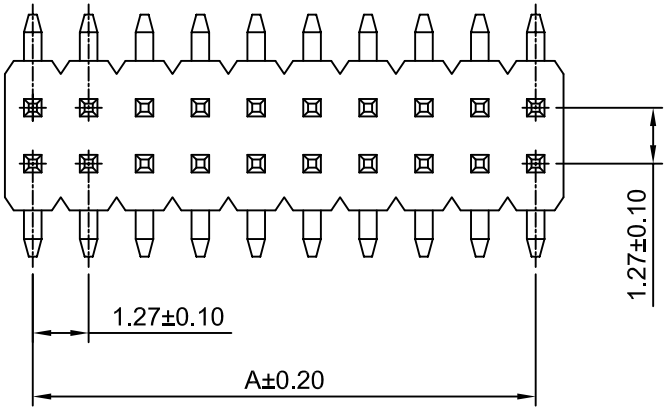

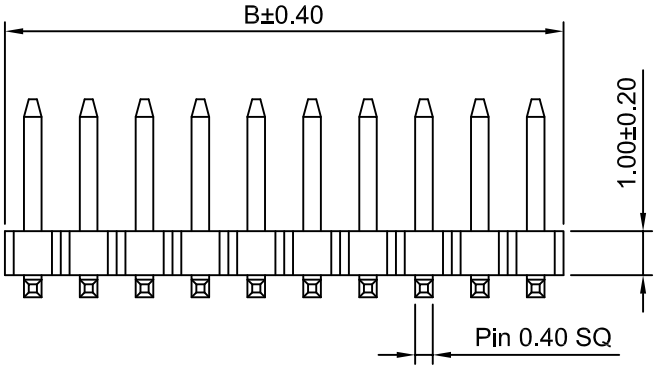

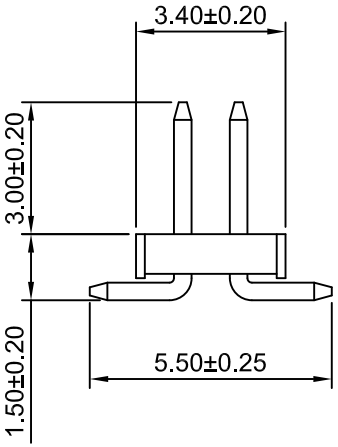

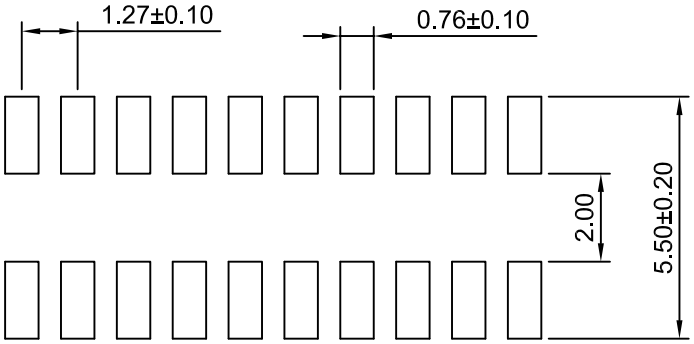

P.C.B LAYOUT

SPECIFICATIONS:

Current Rating: 3A AC,DC
Voltage Rating: 250V AC,DC
Temperature Range: -25°C ~ +85°C
Contact Resistance: 20mΩ Max
Insulation Resistance: 1000MΩ Min
Withstanding Voltage: 1500V AC/minute
Pin Material: Brass/Gold over Nickel
Material: Nylon 6T,UL94V-0(Black)

Ordering Information & Dimensions

Circuits	Dim(mm)		Circuits	Dim(mm)		Circuits	Dim(mm)	
	A	B		A	B		A	B
2x2P	1.27	2.54	2x19P	22.86	24.13	2x36P	44.45	45.72
2x3P	2.54	3.81	2x20P	24.13	25.40	2x37P	45.72	46.99
2x4P	3.81	5.08	2x21P	25.40	26.67	2x38P	46.99	48.26
2x5P	5.08	6.35	2x22P	26.67	27.94	2x39P	48.26	49.53
2x6P	6.35	7.62	2x23P	27.94	29.21	2x40P	49.53	50.80
2x7P	7.62	8.89	2x24P	29.21	30.48	2x41P	50.80	52.07
2x8P	8.89	10.16	2x25P	30.48	31.75	2x42P	52.07	53.34
2x9P	10.16	11.43	2x26P	31.75	33.02	2x43P	53.34	54.61
2x10P	11.43	12.70	2x27P	33.02	34.29	2x44P	54.61	55.88
2x11P	12.70	13.97	2x28P	34.29	35.56	2x45P	55.88	57.15
2x12P	13.97	15.24	2x29P	35.56	36.83	2x46P	57.15	58.42
2x13P	15.24	16.51	2x30P	36.83	38.10	2x47P	58.42	59.69
2x14P	16.51	17.78	2x31P	38.10	39.37	2x48P	59.69	60.96
2x15P	17.78	19.05	2x32P	39.37	40.64	2x49P	60.96	62.23
2x16P	19.05	20.32	2x33P	40.64	41.91	2x50P	62.23	63.50
2x17P	20.32	21.59	2x34P	41.91	43.18			
2x18P	21.59	22.86	2x35P	43.18	44.46			

深圳市华德共创科技有限公司
Shenzhen Huade co-create Technology Co.,LTD
TEL：0755-27129737 FAX：0755-29940187

-TOLERANCES- UNLESS OTHERWISE SPECIFIED 公差参数表						TITLE: 产品名称：	1.27mm Pitch 180 ° Wafer		
X.X	±0.30	X.X°	±3°	APPD: 核准：	XIE	PART NO: 产品编号：	HDGC1276WV-S-2xXP		
X.XX	±0.30	X.XX°	±2°	CHECK: 校对：	WANG	DATE	SCALE	UNIT	CODE NUMBER
X.XXX	±0.10	X.XXX°	±1°	DRAW: 绘图：	WANG	2014-07-25	6:1	mm	A008

修订 REV	标记 MARK	修改摘要 REVISION DESCRIPTION	签名 SIGNA TURE	日期 DATE
A0		NEW RELEEASE	WANG	2017-10-25

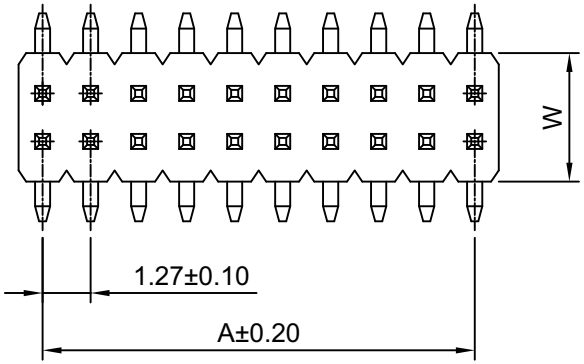

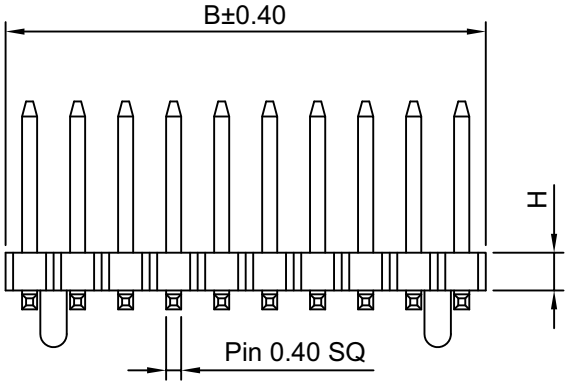

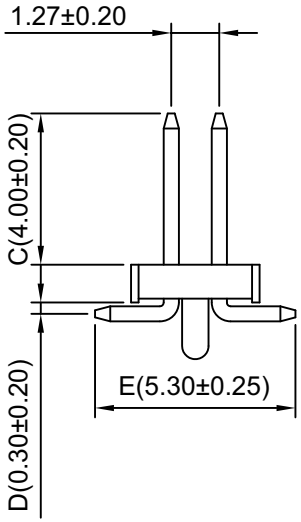

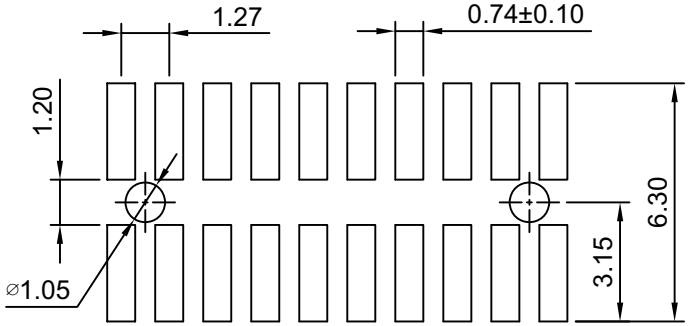

P.C.B LAYOUT

Ordering Information:

HDGC1276WV-S-F-2xXP - *** - ***
1 2 3

1.Part No.
2.Size(H):
(Blank):1.00mm (W:3.40mm)
H15:1.50mm(W:3.40mm)
H20:2.00mm(W:3.00mm)
H25:2.50mm(W:3.00mm)
3.Material:
(Blank):Nylon 6T,UL94V-0
GWT :Nylon 6T,UL94V-0 GWT 750 ℃

SPECIFICATIONS:

Current Rating: 1A AC,DC
Voltage Rating: 30V AC,DC
Temperature Range: -25°C ~ +85°C
Contact Resistance: 20mΩ Max
Insulation Resistance: 1000MΩ Min
Withstanding Voltage: 500V AC/minute
Pin Material: Brass/Gold over Nickel
Material: Nylon 6T,UL94V-0(Black)

Ordering Information & Dimensions

Circuits	Dim(mm)		Circuits	Dim(mm)		Circuits	Dim(mm)	
	A	B		A	B		A	B
2x2P	1.27	2.54	2x19P	22.86	24.13	2x36P	44.45	45.72
2x3P	2.54	3.81	2x20P	24.13	25.40	2x37P	45.72	46.99
2x4P	3.81	5.08	2x21P	25.40	26.67	2x38P	46.99	48.26
2x5P	5.08	6.35	2x22P	26.67	27.94	2x39P	48.26	49.53
2x6P	6.35	7.62	2x23P	27.94	29.21	2x40P	49.53	50.80
2x7P	7.62	8.89	2x24P	29.21	30.48	2x41P	50.80	52.07
2x8P	8.89	10.16	2x25P	30.48	31.75	2x42P	52.07	53.34
2x9P	10.16	11.43	2x26P	31.75	33.02	2x43P	53.34	54.61
2x10P	11.43	12.70	2x27P	33.02	34.29	2x44P	54.61	55.88
2x11P	12.70	13.97	2x28P	34.29	35.56	2x45P	55.88	57.15
2x12P	13.97	15.24	2x29P	35.56	36.83	2x46P	57.15	58.42
2x13P	15.24	16.51	2x30P	36.83	38.10	2x47P	58.42	59.69
2x14P	16.51	17.78	2x31P	38.10	39.37	2x48P	59.69	60.96
2x15P	17.78	19.05	2x32P	39.37	40.64	2x49P	60.96	62.23
2x16P	19.05	20.32	2x33P	40.64	41.91	2x50P	62.23	63.50
2x17P	20.32	21.59	2x34P	41.91	43.18			
2x18P	21.59	22.86	2x35P	43.18	44.46			

深圳市华德共创科技有限公司
Shenzhen Huade co-create Technology Co.,LTD
TEL：0755-27129737 FAX：0755-29940187

-TOLERANCES- UNLESS OTHERWISE SPECIFIED 公差参数表						TITLE: 产品名称：	1.27mm Pitch 180 ° Wafer		
X.X	±0.30	X.X°	±3°	APPD: 核准：	XIE	PART NO: 产品编号：	HDGC1276WV-S-F-2xXP		
X.XX	±0.30	X.XX°	±2°	CHECK: 校对：	WANG	DATE	SCALE	UNIT	CODE NUMBER
X.XXX	±0.10	X.XXX°	±1°	DRAW: 绘图：	WANG	2017-10-25	6:1	mm	A008

修订 REV	标记 MARK	修改摘要 REVISION DESCRIPTION	签名 SIGNA TURE	日期 DATE
A0		NEW RELEEASE	WANG	2017-12-09

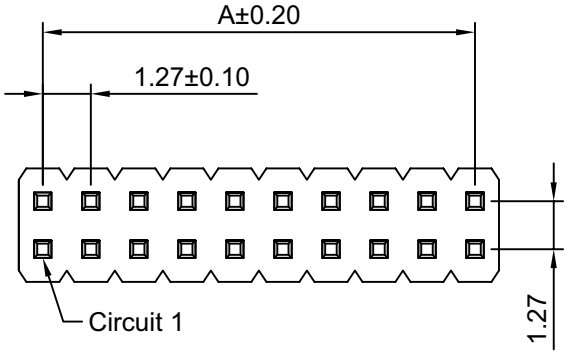

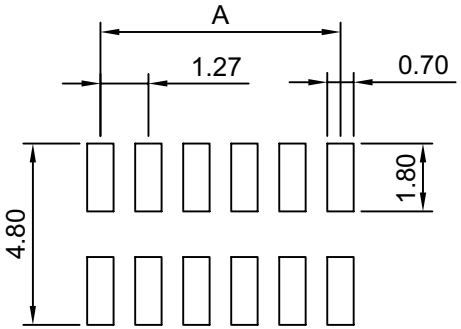

P.C.B LAYOUT

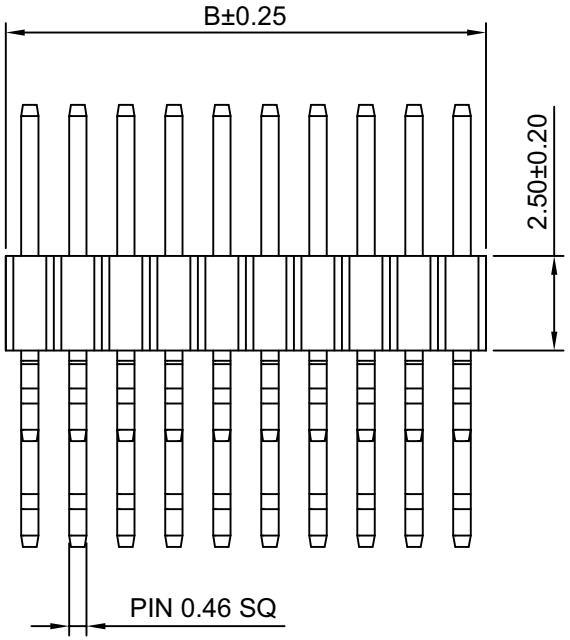

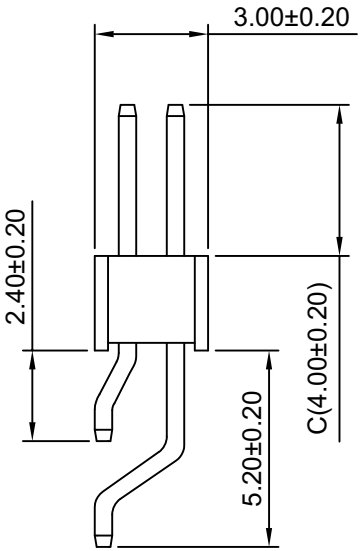

SPECIFICATIONS:

Current Rating: 1.0A AC,DC
Voltage Rating: 30V AC,DC
Temperature Range: -25°C ~ +85°C
Contact Resistance: 20mΩ Max
Insulation Resistance: 1000MΩ Min
Withstanding Voltage: 500V AC/minute
Pin Material: Brass/Gold over Nickel
Material: Nylon 6T,UL94V-0(Black)

Ordering Information & Dimensions

Circuits	Dim(mm)		Circuits	Dim(mm)		Circuits	Dim(mm)	
	A	B		A	B		A	B
2x2P	1.27	2.54	2x19P	22.86	24.13	2x36P	44.45	45.72
2x3P	2.54	3.81	2x20P	24.13	25.40	2x37P	45.72	46.99
2x4P	3.81	5.08	2x21P	25.40	26.67	2x38P	46.99	48.26
2x5P	5.08	6.35	2x22P	26.67	27.94	2x39P	48.26	49.53
2x6P	6.35	7.62	2x23P	27.94	29.21	2x40P	49.53	50.80
2x7P	7.62	8.89	2x24P	29.21	30.48	2x41P	50.80	52.07
2x8P	8.89	10.16	2x25P	30.48	31.75	2x42P	52.07	53.34
2x9P	10.16	11.43	2x26P	31.75	33.02	2x43P	53.34	54.61
2x10P	11.43	12.70	2x27P	33.02	34.29	2x44P	54.61	55.88
2x11P	12.70	13.97	2x28P	34.29	35.56	2x45P	55.88	57.15
2x12P	13.97	15.24	2x29P	35.56	36.83	2x46P	57.15	58.42
2x13P	15.24	16.51	2x30P	36.83	38.10	2x47P	58.42	59.69
2x14P	16.51	17.78	2x31P	38.10	39.37	2x48P	59.69	60.96
2x15P	17.78	19.05	2x32P	39.37	40.64	2x49P	60.96	62.23
2x16P	19.05	20.32	2x33P	40.64	41.91	2x50P	62.23	63.50
2x17P	20.32	21.59	2x34P	41.91	43.18			
2x18P	21.59	22.86	2x35P	43.18	44.46			

HDGC 深圳市华德共创科技有限公司
Shenzhen Huade co-create Technology Co.,LTD
TEL：0755-27129737 FAX：0755-29940187

-TOLERANCES- UNLESS OTHERWISE SPECIFIED 公差参数表									
X.X	±0.30	X.X°	±3°	APPD: 核准：	XIE	TITLE: 产品名称：	1.27mm Pitch 90 ° Pin Header		
X.XX	±0.30	X.XX°	±2°	CHECK: 校对：	WANG	DATE	SCALE	UNIT	CODE NUMBER
X.XXX	±0.10	X.XXX°	±1°	DRAW: 绘图：	WANG	2017-12-09	5:1	mm	A008

PART NO: 产品编号： HDGC1276WR-S-2xXP-H25

修订 REV	标记 MARK	修改摘要 REVISION DESCRIPTION	签名 SIGNA TURE	日期 DATE
A0		NEW RELEEASE	WANG	2013-07-10

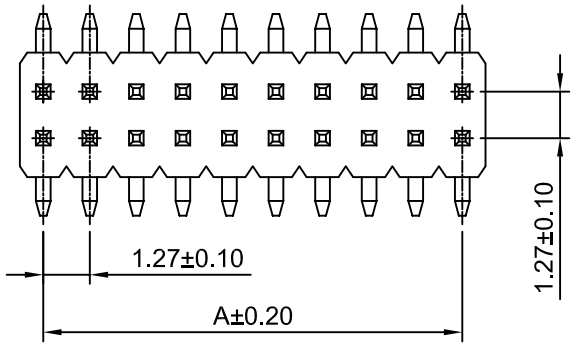

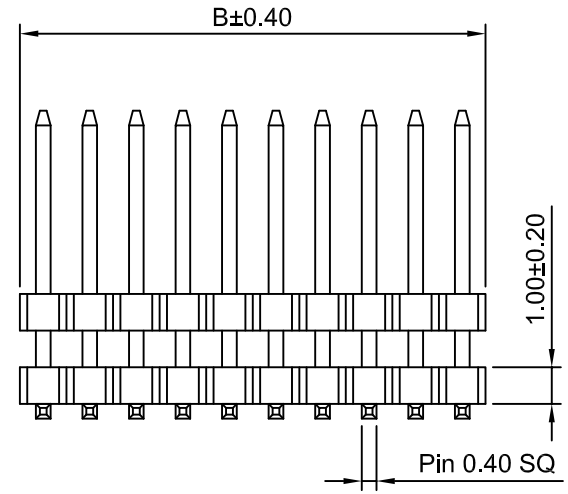

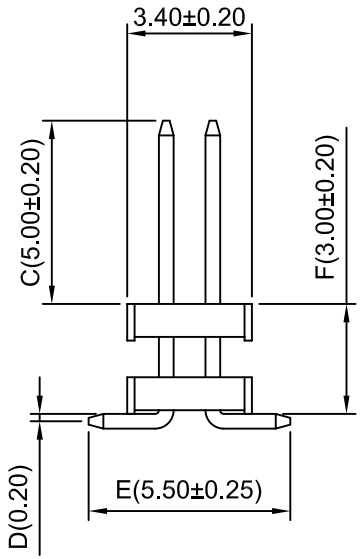

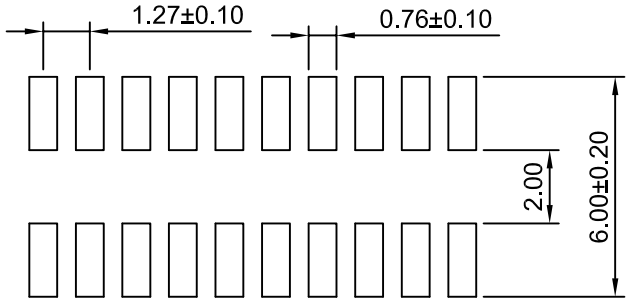

P.C.B LAYOUT

SPECIFICATIONS:

Current Rating: 3A AC,DC
Voltage Rating: 250V AC,DC
Temperature Range: -25°C ~ +85°C
Contact Resistance: 20mΩ Max
Insulation Resistance: 1000MΩ Min
Withstanding Voltage: 1500V AC/minute
Pin Material: Brass/Gold over Nickel
Material: Nylon 6T,UL94V-0(Black)

Ordering Information & Dimensions

Circuits	Dim(mm)		Circuits	Dim(mm)		Circuits	Dim(mm)	
	A	B		A	B		A	B
2x2P	1.27	2.54	2x19P	22.86	24.13	2x36P	44.45	45.72
2x3P	2.54	3.81	2x20P	24.13	25.40	2x37P	45.72	46.99
2x4P	3.81	5.08	2x21P	25.40	26.67	2x38P	46.99	48.26
2x5P	5.08	6.35	2x22P	26.67	27.94	2x39P	48.26	49.53
2x6P	6.35	7.62	2x23P	27.94	29.21	2x40P	49.53	50.80
2x7P	7.62	8.89	2x24P	29.21	30.48	2x41P	50.80	52.07
2x8P	8.89	10.16	2x25P	30.48	31.75	2x42P	52.07	53.34
2x9P	10.16	11.43	2x26P	31.75	33.02	2x43P	53.34	54.61
2x10P	11.43	12.70	2x27P	33.02	34.29	2x44P	54.61	55.88
2x11P	12.70	13.97	2x28P	34.29	35.56	2x45P	55.88	57.15
2x12P	13.97	15.24	2x29P	35.56	36.83	2x46P	57.15	58.42
2x13P	15.24	16.51	2x30P	36.83	38.10	2x47P	58.42	59.69
2x14P	16.51	17.78	2x31P	38.10	39.37	2x48P	59.69	60.96
2x15P	17.78	19.05	2x32P	39.37	40.64	2x49P	60.96	62.23
2x16P	19.05	20.32	2x33P	40.64	41.91	2x50P	62.23	63.50
2x17P	20.32	21.59	2x34P	41.91	43.18			
2x18P	21.59	22.86	2x35P	43.18	44.46			

深圳市华德共创科技有限公司
Shenzhen Huade co-create Technology Co.,LTD
TEL：0755-27129737 FAX：0755-29940187

-TOLERANCES- UNLESS OTHERWISE SPECIFIED 公差参数表						TITLE: 产品名称：	1.27mm Pitch 180 ° Pin Header		
X.X	±0.30	X.X°	±3°	APPD: 核准：	XIE	PART NO: 产品编号：	HDGC1276WVA-S-2xXP		
X.XX	±0.30	X.XX°	±2°	CHECK: 校对：	WANG	DATE	SCALE	UNIT	CODE NUMBER
X.XXX	±0.10	X.XXX°	±1°	DRAW: 绘图：	WANG	2013-07-10	5:1	mm	A008

修订 REV	标记 MARK	修改摘要 REVISION DESCRIPTION	签名 SIGNA TURE	日期 DATE
A0		NEW RELEEASE	WANG	2017-12-09

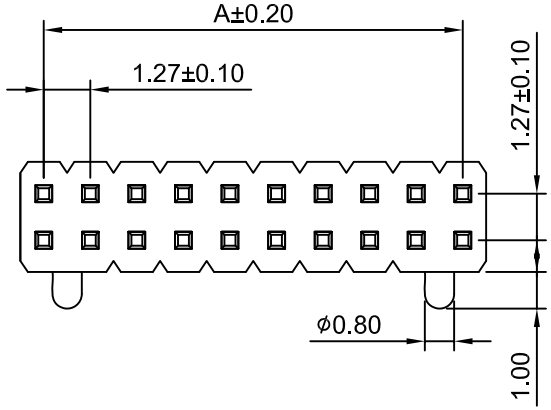

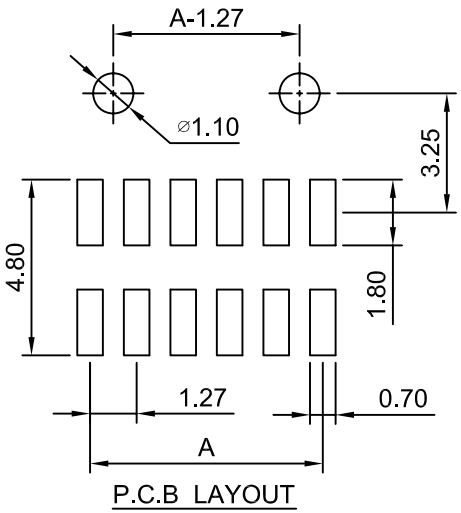

P.C.B LAYOUT

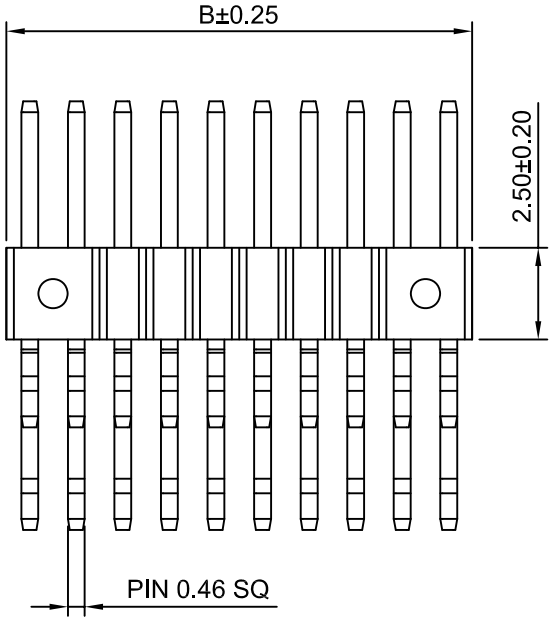

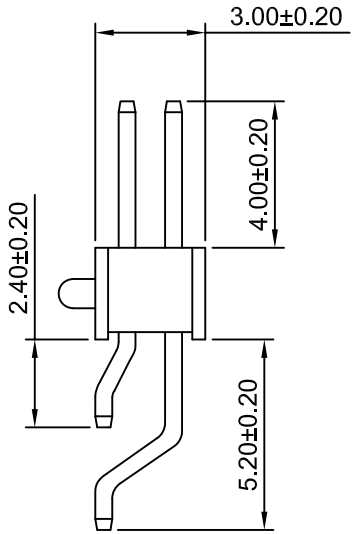

SPECIFICATIONS:

Current Rating: 1.0A AC,DC
Voltage Rating: 30V AC,DC
Temperature Range: -25°C ~ +85°C
Contact Resistance: 20mΩ Max
Insulation Resistance: 1000MΩ Min
Withstanding Voltage: 500V AC/minute
Pin Material: Brass/Gold over Nickel
Material: Nylon 6T,UL94V-0(Black)

Ordering Information & Dimensions

Circuits	Dim(mm)		Circuits	Dim(mm)		Circuits	Dim(mm)	
	A	B		A	B		A	B
2x2P	1.27	2.54	2x19P	22.86	24.13	2x36P	44.45	45.72
2x3P	2.54	3.81	2x20P	24.13	25.40	2x37P	45.72	46.99
2x4P	3.81	5.08	2x21P	25.40	26.67	2x38P	46.99	48.26
2x5P	5.08	6.35	2x22P	26.67	27.94	2x39P	48.26	49.53
2x6P	6.35	7.62	2x23P	27.94	29.21	2x40P	49.53	50.80
2x7P	7.62	8.89	2x24P	29.21	30.48	2x41P	50.80	52.07
2x8P	8.89	10.16	2x25P	30.48	31.75	2x42P	52.07	53.34
2x9P	10.16	11.43	2x26P	31.75	33.02	2x43P	53.34	54.61
2x10P	11.43	12.70	2x27P	33.02	34.29	2x44P	54.61	55.88
2x11P	12.70	13.97	2x28P	34.29	35.56	2x45P	55.88	57.15
2x12P	13.97	15.24	2x29P	35.56	36.83	2x46P	57.15	58.42
2x13P	15.24	16.51	2x30P	36.83	38.10	2x47P	58.42	59.69
2x14P	16.51	17.78	2x31P	38.10	39.37	2x48P	59.69	60.96
2x15P	17.78	19.05	2x32P	39.37	40.64	2x49P	60.96	62.23
2x16P	19.05	20.32	2x33P	40.64	41.91	2x50P	62.23	63.50
2x17P	20.32	21.59	2x34P	41.91	43.18			
2x18P	21.59	22.86	2x35P	43.18	44.46			

深圳市华德共创科技有限公司
Shenzhen Huade co-create Technology Co.,LTD
TEL：0755-27129737 FAX：0755-29940187

-TOLERANCES- UNLESS OTHERWISE SPECIFIED 公差参数表						TITLE: 产品名称：	1.27mm Pitch 90 ° Pin Header		
X.X	±0.30	X.X°	±3°	APPD: 核准：	XIE	PART NO: 产品编号：	HDGC1276WR-SF-2xXP-H25		
X.XX	±0.30	X.XX°	±2°	CHECK: 校对：	WANG	DATE	SCALE	UNIT	CODE NUMBER
X.XXX	±0.10	X.XXX°	±1°	DRAW: 绘图：	WANG	2017-12-09	5:1	mm	A008

修订 REV	标记 MARK	修改摘要 REVISION DESCRIPTION	签名 SIGNA TURE	日期 DATE
A0		NEW RELEEASE	WANG	2017-12-09

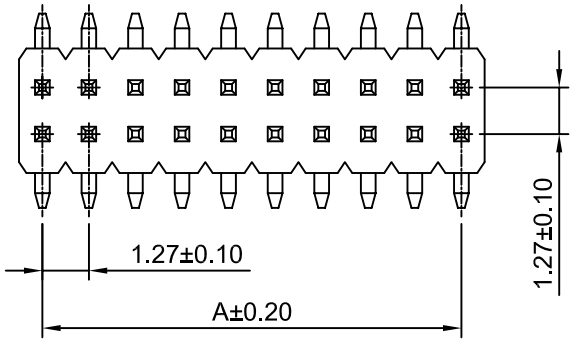

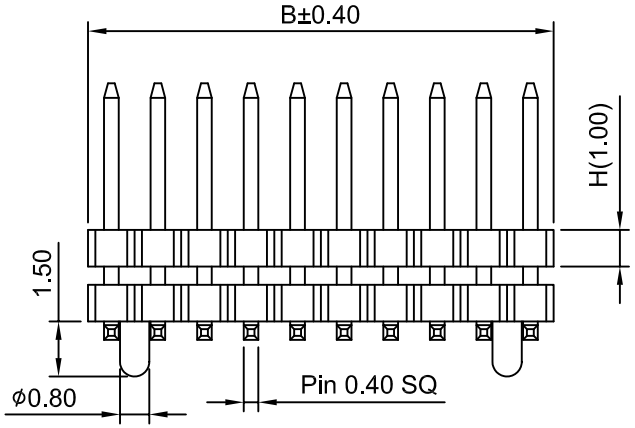

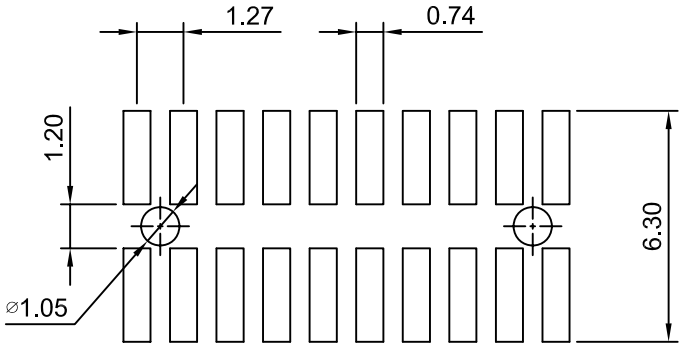

P.C.B LAYOUT

Ordering Information:

HDGC1276WVA-S-F-2xXP - *** - ***
1 2 3

1.Part No.
2.Size(H):
(Blank):1.00mm(W:3.40mm)
H15:1.50mm(W:3.40mm)
H20:2.00mm(W:3.00mm)
H25:2.50mm(W:3.00mm)
3.Material:
(Blank):Nylon 6T,UL94V-0
GWT :Nylon 6T,UL94V-0 GWT 750℃

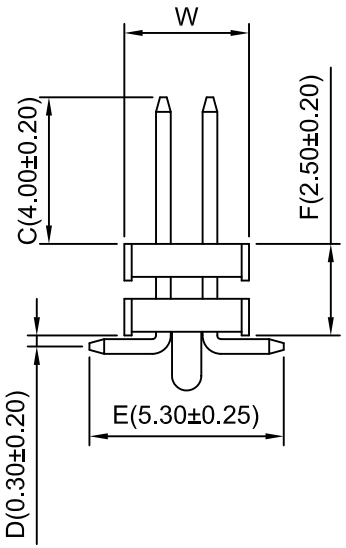

SPECIFICATIONS:

Current Rating: 1A AC,DC
Voltage Rating: 30V AC,DC
Temperature Range: -25°C ~ +85°C
Contact Resistance: 20mΩ Max
Insulation Resistance: 1000MΩ Min
Withstanding Voltage: 500V AC/minute
Pin Material: Brass/Gold over Nickel
Material: Nylon 6T,UL94V-0(Black)

Ordering Information & Dimensions

Circuits	Dim(mm)		Circuits	Dim(mm)		Circuits	Dim(mm)	
	A	B		A	B		A	B
2x2P	1.27	2.54	2x19P	22.86	24.13	2x36P	44.45	45.72
2x3P	2.54	3.81	2x20P	24.13	25.40	2x37P	45.72	46.99
2x4P	3.81	5.08	2x21P	25.40	26.67	2x38P	46.99	48.26
2x5P	5.08	6.35	2x22P	26.67	27.94	2x39P	48.26	49.53
2x6P	6.35	7.62	2x23P	27.94	29.21	2x40P	49.53	50.80
2x7P	7.62	8.89	2x24P	29.21	30.48	2x41P	50.80	52.07
2x8P	8.89	10.16	2x25P	30.48	31.75	2x42P	52.07	53.34
2x9P	10.16	11.43	2x26P	31.75	33.02	2x43P	53.34	54.61
2x10P	11.43	12.70	2x27P	33.02	34.29	2x44P	54.61	55.88
2x11P	12.70	13.97	2x28P	34.29	35.56	2x45P	55.88	57.15
2x12P	13.97	15.24	2x29P	35.56	36.83	2x46P	57.15	58.42
2x13P	15.24	16.51	2x30P	36.83	38.10	2x47P	58.42	59.69
2x14P	16.51	17.78	2x31P	38.10	39.37	2x48P	59.69	60.96
2x15P	17.78	19.05	2x32P	39.37	40.64	2x49P	60.96	62.23
2x16P	19.05	20.32	2x33P	40.64	41.91	2x50P	62.23	63.50
2x17P	20.32	21.59	2x34P	41.91	43.18			
2x18P	21.59	22.86	2x35P	43.18	44.46			

深圳市华德共创科技有限公司
Shenzhen Huade co-create Technology Co.,LTD
TEL：0755-27129737 FAX：0755-29940187

-TOLERANCES- UNLESS OTHERWISE SPECIFIED 公差参数表						TITLE: 产品名称：	1.27mm Pitch 180 ° Pin Header		
X.X	±0.30	X.X°	±3°	APPD: 核准：	XIE	PART NO: 产品编号：	HDGC1276WVA-S-F-2xXP		
X.XX	±0.30	X.XX°	±2°	CHECK: 校对：	WANG	DATE	SCALE	UNIT	CODE NUMBER
X.XXX	±0.10	X.XXX°	±1°	DRAW: 绘图：	WANG	2017-12-09	5:1	mm	A008

修订 REV	标记 MARK	修改摘要 REVISION DESCRIPTION	签名 SIGNA TURE	日期 DATE
A0		NEW RELEEASE	WANG	2017-12-09

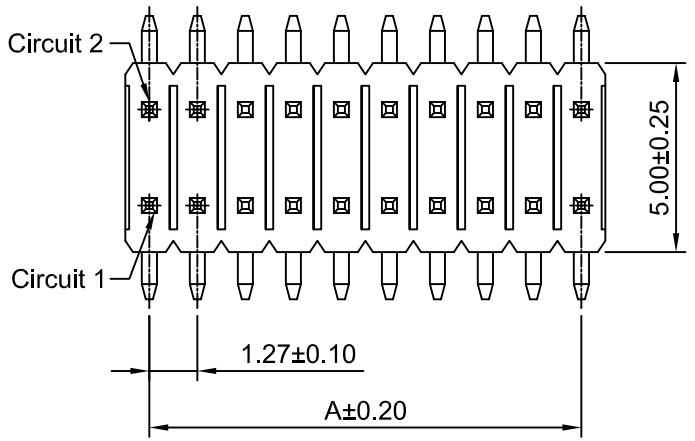

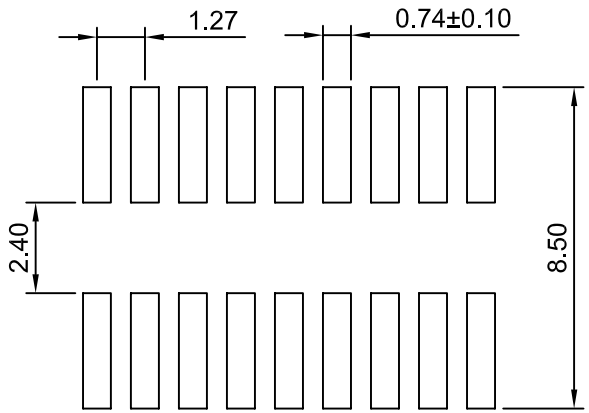

P.C.B LAYOUT

SPECIFICATIONS:

Current Rating: 1A AC,DC
Voltage Rating: 30V AC,DC
Temperature Range: -25°C ~ +85°C
Contact Resistance: 20mΩ Max
Insulation Resistance: 1000MΩ Min
Withstanding Voltage: 500V AC/minute
Pin Material: Brass/Gold over Nickel
Material: Nylon 9T,UL94V-0(Black)

Ordering Information & Dimensions

Circuits	Dim(mm)		Circuits	Dim(mm)		Circuits	Dim(mm)	
	A	B		A	B		A	B
2x2P	1.27	2.54	2x19P	22.86	24.13	2x36P	44.45	45.72
2x3P	2.54	3.81	2x20P	24.13	25.40	2x37P	45.72	46.99
2x4P	3.81	5.08	2x21P	25.40	26.67	2x38P	46.99	48.26
2x5P	5.08	6.35	2x22P	26.67	27.94	2x39P	48.26	49.53
2x6P	6.35	7.62	2x23P	27.94	29.21	2x40P	49.53	50.80
2x7P	7.62	8.89	2x24P	29.21	30.48	2x41P	50.80	52.07
2x8P	8.89	10.16	2x25P	30.48	31.75	2x42P	52.07	53.34
2x9P	10.16	11.43	2x26P	31.75	33.02	2x43P	53.34	54.61
2x10P	11.43	12.70	2x27P	33.02	34.29	2x44P	54.61	55.88
2x11P	12.70	13.97	2x28P	34.29	35.56	2x45P	55.88	57.15
2x12P	13.97	15.24	2x29P	35.56	36.83	2x46P	57.15	58.42
2x13P	15.24	16.51	2x30P	36.83	38.10	2x47P	58.42	59.69
2x14P	16.51	17.78	2x31P	38.10	39.37	2x48P	59.69	60.96
2x15P	17.78	19.05	2x32P	39.37	40.64	2x49P	60.96	62.23
2x16P	19.05	20.32	2x33P	40.64	41.91	2x50P	62.23	63.50
2x17P	20.32	21.59	2x34P	41.91	43.18			
2x18P	21.59	22.86	2x35P	43.18	44.46			

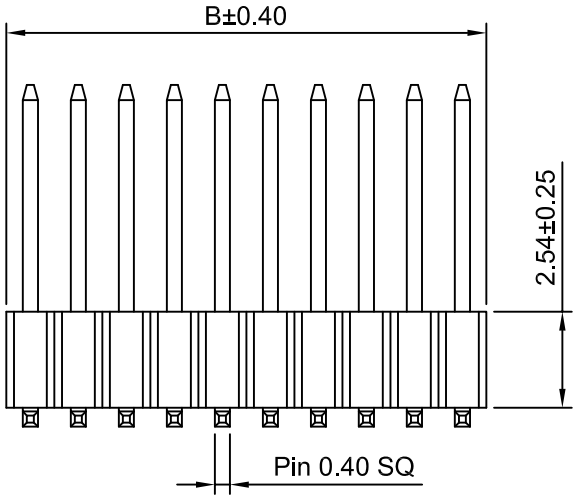

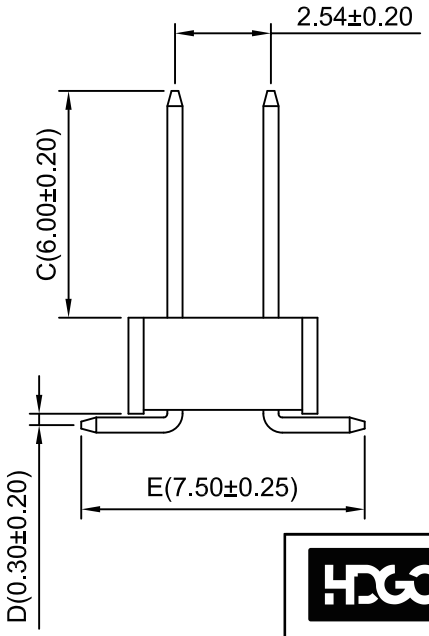

深圳市华德共创科技有限公司
Shenzhen Huade co-create Technology Co.,LTD
TEL：0755-27129737 FAX：0755-29940187

-TOLERANCES- UNLESS OTHERWISE SPECIFIED 公差参数表									
X.X	±0.30	X.X°	±3°	APPD: 核准：	XIE	TITLE: 产品名称：	1.27mm Pitch 180 ° Wafer		
X.XX	±0.30	X.XX°	±2°	CHECK: 校对：	WANG	PART NO: 产品编号：	HDGC1276WVB-S-2xXP-H25		
X.XXX	±0.10	X.XXX°	±1°	DRAW: 绘图：	WANG	DATE	SCALE	UNIT	CODE NUMBER
						2017-12-09	5:1	mm	A008

修订 REV	标记 MARK	修改摘要 REVISION DESCRIPTION	签名 SIGNA TURE	日期 DATE
A0		NEW RELEEASE	WANG	2017-12-09

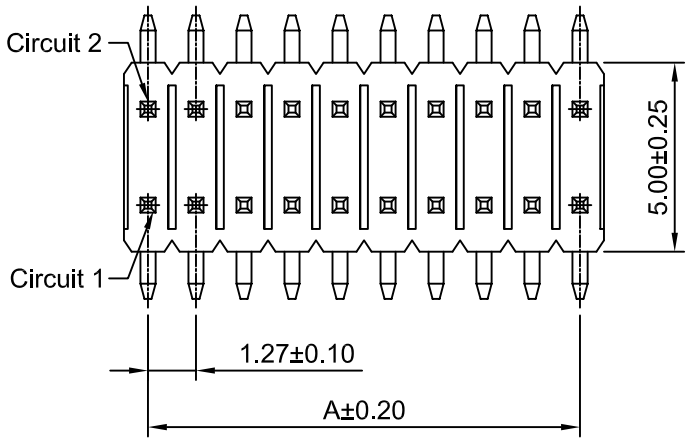

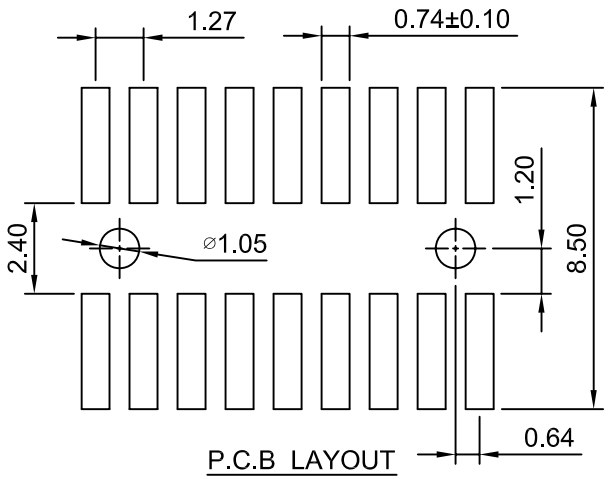

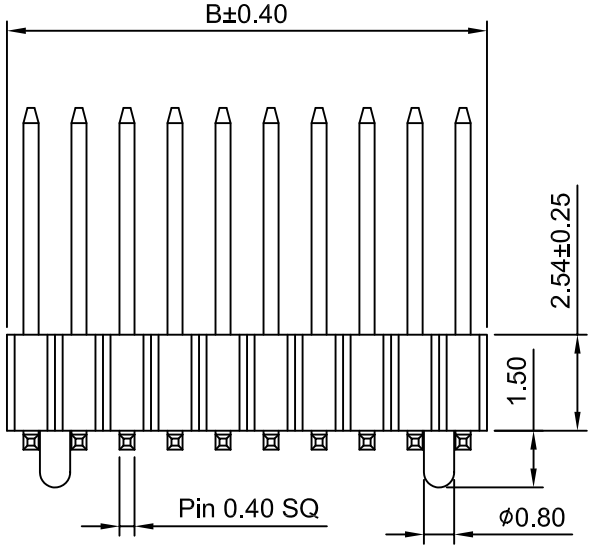

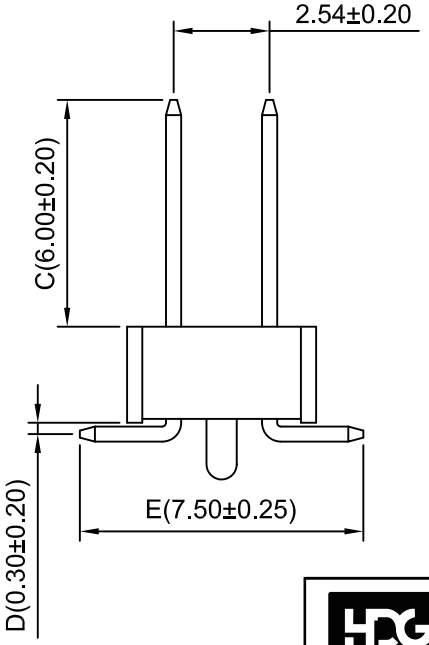

SPECIFICATIONS:

Current Rating: 1A AC,DC
Voltage Rating: 30V AC,DC
Temperature Range: -25°C ~ +85°C
Contact Resistance: 20mΩ Max
Insulation Resistance: 1000MΩ Min
Withstanding Voltage: 500V AC/minute
Pin Material: Brass/Gold over Nickel
Material: Nylon 9T,UL94V-0(Black)

Ordering Information & Dimensions

Circuits	Dim(mm)		Circuits	Dim(mm)		Circuits	Dim(mm)	
	A	B		A	B		A	B
2x2P	1.27	2.54	2x19P	22.86	24.13	2x36P	44.45	45.72
2x3P	2.54	3.81	2x20P	24.13	25.40	2x37P	45.72	46.99
2x4P	3.81	5.08	2x21P	25.40	26.67	2x38P	46.99	48.26
2x5P	5.08	6.35	2x22P	26.67	27.94	2x39P	48.26	49.53
2x6P	6.35	7.62	2x23P	27.94	29.21	2x40P	49.53	50.80
2x7P	7.62	8.89	2x24P	29.21	30.48	2x41P	50.80	52.07
2x8P	8.89	10.16	2x25P	30.48	31.75	2x42P	52.07	53.34
2x9P	10.16	11.43	2x26P	31.75	33.02	2x43P	53.34	54.61
2x10P	11.43	12.70	2x27P	33.02	34.29	2x44P	54.61	55.88
2x11P	12.70	13.97	2x28P	34.29	35.56	2x45P	55.88	57.15
2x12P	13.97	15.24	2x29P	35.56	36.83	2x46P	57.15	58.42
2x13P	15.24	16.51	2x30P	36.83	38.10	2x47P	58.42	59.69
2x14P	16.51	17.78	2x31P	38.10	39.37	2x48P	59.69	60.96
2x15P	17.78	19.05	2x32P	39.37	40.64	2x49P	60.96	62.23
2x16P	19.05	20.32	2x33P	40.64	41.91	2x50P	62.23	63.50
2x17P	20.32	21.59	2x34P	41.91	43.18			
2x18P	21.59	22.86	2x35P	43.18	44.46			

深圳市华德共创科技有限公司
Shenzhen Huade co-create Technology Co.,LTD
TEL：0755-27129737 FAX：0755-29940187

-TOLERANCES- UNLESS OTHERWISE SPECIFIED 公差参数表						TITLE: 产品名称：	1.27mm Pitch 180 ° Wafer		
X.X	±0.30	X.X°	±3°	APPD: 核准：	XIE	PART NO: 产品编号：	HDGC1276WVB-S-F-2xXP-H25		
X.XX	±0.30	X.XX°	±2°	CHECK: 校对：	WANG	DATE	SCALE	UNIT	CODE NUMBER
X.XXX	±0.10	X.XXX°	±1°	DRAW: 绘图：	WANG	2017-12-09	5:1	mm	A008

修订 REV	标记 MARK	修改摘要 REVISION DESCRIPTION	签名 SIGNA TURE	日期 DATE
A0		NEW RELEEASE	WANG	2014-08-11

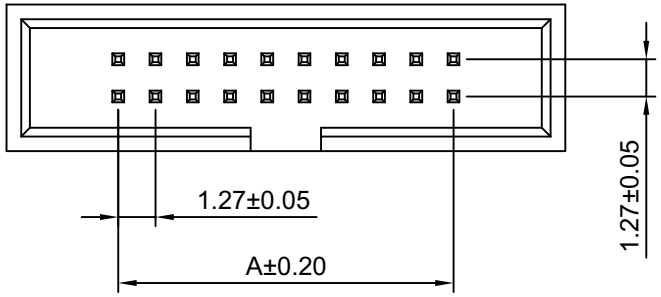

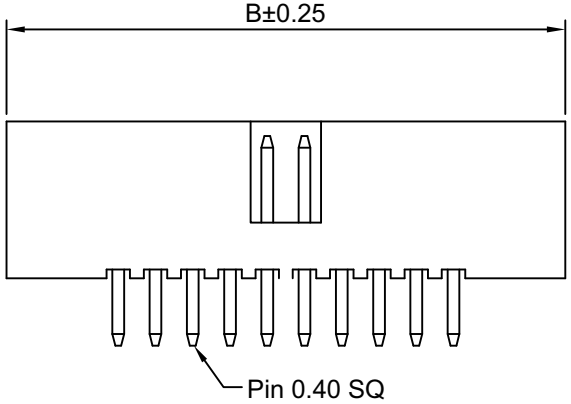

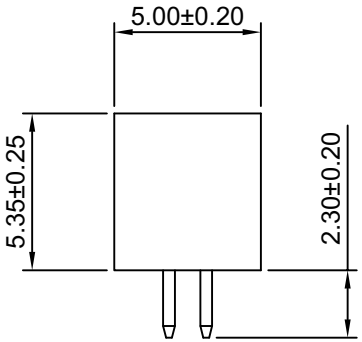

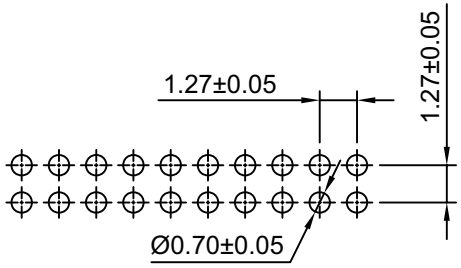

PCB LAYOUT

SPECIFICATIONS:

Current Rating: 1A AC,DC
Voltage Rating: 50V AC,DC
Temperature Range: -25°C ~ +85°C
Contact Resistance: 20MΩ Max.
Insulation Resistance: 1000MΩ Min.
Withstanding Voltage: 500V AC/minute
Pin Material: Brass/Gold over Nickel
Material: PBT,UL94V-0(Black)

Ordering Information & Dimensions

Circuits	Dim(mm)		Circuits	Dim(mm)		Circuits	Dim(mm)	
	A	B		A	B		A	B
2x2P	1.27	8.89	2x19P	22.86	30.48	2x36P	44.46	52.07
2x3P	2.54	10.16	2x20P	24.13	31.75	2x37P	45.72	53.34
2x4P	3.81	11.43	2x21P	25.40	33.02	2x38P	46.99	54.61
2x5P	5.08	12.70	2x22P	26.67	34.29	2x39P	48.26	55.88
2x6P	6.35	13.97	2x23P	27.94	35.56	2x40P	49.53	57.15
2x7P	7.62	15.24	2x24P	29.21	36.83	2x41P	50.80	58.42
2x8P	8.89	16.51	2x25P	30.48	38.10	2x42P	52.07	59.69
2x9P	10.16	17.78	2x26P	31.75	39.37	2x43P	53.34	60.96
2x10P	11.43	19.05	2x27P	33.02	40.64	2x44P	54.61	62.23
2x11P	12.70	20.32	2x28P	34.29	41.91	2x45P	55.88	63.50
2x12P	13.97	21.59	2x29P	35.56	43.18	2x46P	57.15	64.77
2x13P	15.24	22.86	2x30P	36.83	44.46	2x47P	58.42	66.04
2x14P	16.51	24.13	2x31P	38.10	45.72	2x48P	59.69	67.31
2x15P	17.78	25.40	2x32P	39.37	46.99	2x49P	60.96	68.58
2x16P	19.05	26.67	2x33P	40.64	48.26	2x50P	62.23	69.85
2x17P	20.32	27.94	2x34P	41.91	49.53			
2x18P	21.59	29.21	2x35P	43.18	50.80			

深圳市华德共创科技有限公司
Shenzhen Huade co-create Technology Co.,LTD
TEL：0755-27129737 FAX：0755-29940187

-TOLERANCES- UNLESS OTHERWISE SPECIFIED 公差参数表									
X.X	±0.30	X.X°	±3°	APPD: 核准：	XIE	TITLE: 产品名称：	1.27mm Pitch 180 ° Wafer		
X.XX	±0.30	X.XX°	±2°	CHECK: 校对：	WANG	DATE	SCALE	UNIT	CODE NUMBER
X.XXX	±0.10	X.XXX°	±1°	DRAW: 绘图：	WANG	2014-08-11	4:1	mm	A008

PART NO: 产品编号： HDGC1276WV-N-2xXP

修订 REV	标记 MARK	修改摘要 REVISION DESCRIPTION	签名 SIGNA TURE	日期 DATE
A0		NEW RELEEASE	WANG	2014-08-11

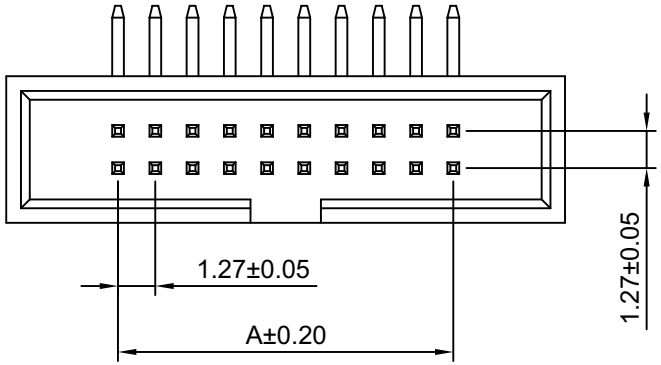

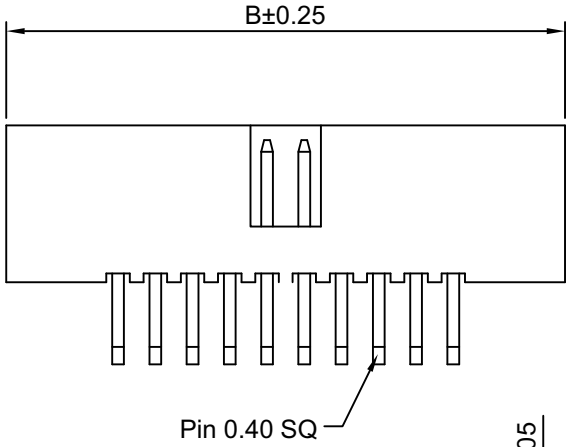

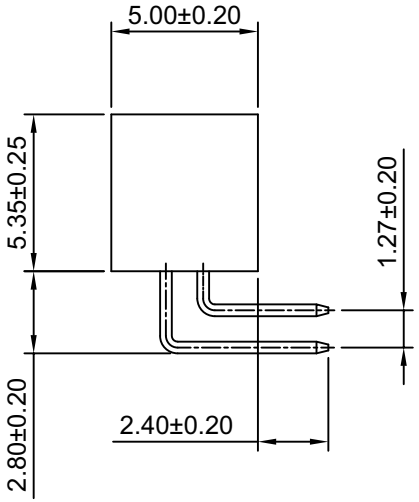

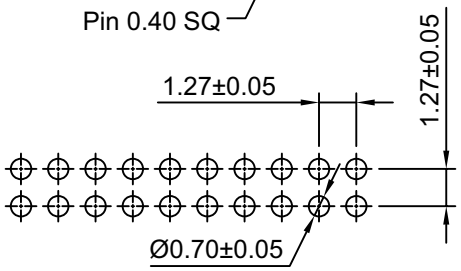

PCB LAYOUT

SPECIFICATIONS:

Current Rating: 1A AC,DC
Voltage Rating: 50V AC,DC
Temperature Range: -25°C ~ +85°C
Contact Resistance: 20MΩ Max.
Insulation Resistance: 1000MΩ Min.
Withstanding Voltage: 500V AC/minute
Pin Material: Brass/Gold over Nickel
Material: PBT,UL94V-0(Black)

Ordering Information & Dimensions

Circuits	Dim(mm)		Circuits	Dim(mm)		Circuits	Dim(mm)	
	A	B		A	B		A	B
2x2P	1.27	8.89	2x19P	22.86	30.48	2x36P	44.45	52.07
2x3P	2.54	10.16	2x20P	24.13	31.75	2x37P	45.72	53.34
2x4P	3.81	11.43	2x21P	25.40	33.02	2x38P	46.99	54.61
2x5P	5.08	12.70	2x22P	26.67	34.29	2x39P	48.26	55.88
2x6P	6.35	13.97	2x23P	27.94	35.56	2x40P	49.53	57.15
2x7P	7.62	15.24	2x24P	29.21	36.83	2x41P	50.80	58.42
2x8P	8.89	16.51	2x25P	30.48	38.10	2x42P	52.07	59.69
2x9P	10.16	17.78	2x26P	31.75	39.37	2x43P	53.34	60.96
2x10P	11.43	19.05	2x27P	33.02	40.64	2x44P	54.61	62.23
2x11P	12.70	20.32	2x28P	34.29	41.91	2x45P	55.88	63.50
2x12P	13.97	21.59	2x29P	35.56	43.18	2x46P	57.15	64.77
2x13P	15.24	22.86	2x30P	36.83	44.46	2x47P	58.42	66.04
2x14P	16.51	24.13	2x31P	38.10	45.72	2x48P	59.69	67.31
2x15P	17.78	25.40	2x32P	39.37	46.99	2x49P	60.96	68.58
2x16P	19.05	26.67	2x33P	40.64	48.26	2x50P	62.23	69.85
2x17P	20.32	27.94	2x34P	41.91	49.53			
2x18P	21.59	29.21	2x35P	43.18	50.80			

深圳市华德共创科技有限公司
Shenzhen Huade co-create Technology Co.,LTD
TEL：0755-27129737 FAX：0755-29940187

-TOLERANCES- UNLESS OTHERWISE SPECIFIED 公差参数表						TITLE: 产品名称：	1.27mm Pitch 90 ° Wafer		
X.X	±0.30	X.X°	±3°	APPD: 核准：	XIE	PART NO: 产品编号：	HDGC1276WR-N-2xXP		
X.XX	±0.30	X.XX°	±2°	CHECK: 校对：	WANG	DATE	SCALE	UNIT	CODE NUMBER
X.XXX	±0.10	X.XXX°	±1°	DRAW: 绘图：	WANG	2014-08-11	4:1	mm	A008

修订 REV	标记 MARK	修改摘要 REVISION DESCRIPTION	签名 SIGNA TURE	日期 DATE
A0		NEW RELEEASE	WANG	2015-08-11

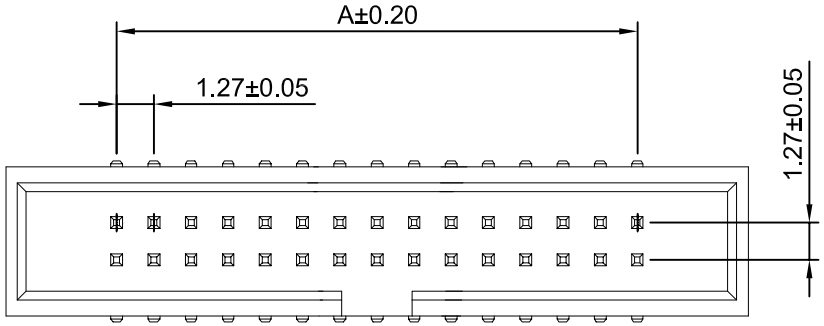

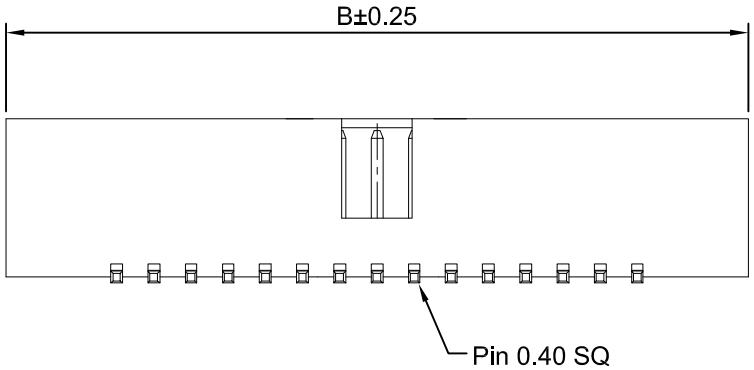

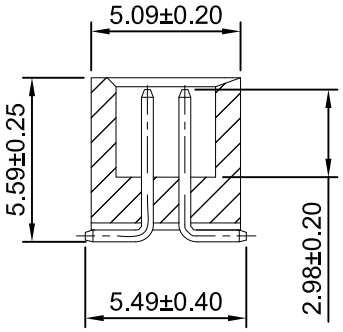

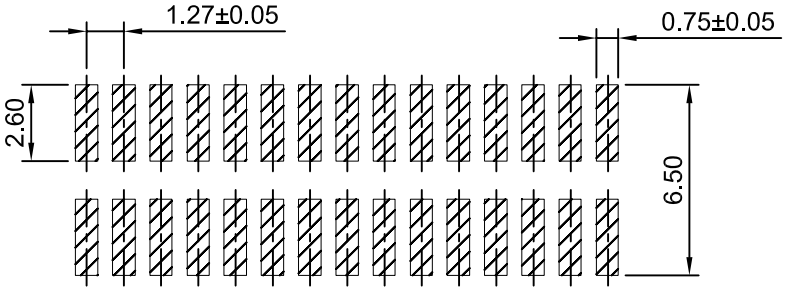

PCB LAYOUT

SPECIFICATIONS:

Current Rating: 1A AC,DC
Voltage Rating: 100V AC,DC
Temperature Range: -25°C ~ +85°C
Contact Resistance: 40MΩ Max.
Insulation Resistance: 500MΩ Min.
Withstanding Voltage: 500V AC/minute
Pin Material: Brass/Gold over Nickel
Material: Nylon6T,UL94V-0(Black)

Ordering Information & Dimensions

Circuits	Dim(mm)		Circuits	Dim(mm)		Circuits	Dim(mm)	
	A	B		A	B		A	B
2x2P	1.27	8.84	2x19P	22.86	30.43	2x36P	44.46	52.02
2x3P	2.54	10.11	2x20P	24.13	31.70	2x37P	45.72	53.29
2x4P	3.81	11.38	2x21P	25.40	32.97	2x38P	46.99	54.56
2x5P	5.08	12.65	2x22P	26.67	34.24	2x39P	48.26	55.83
2x6P	6.35	13.92	2x23P	27.94	35.51	2x40P	49.53	57.10
2x7P	7.62	15.19	2x24P	29.21	36.78	2x41P	50.80	58.37
2x8P	8.89	16.46	2x25P	30.48	38.05	2x42P	52.07	59.64
2x9P	10.16	17.73	2x26P	31.75	39.32	2x43P	53.34	60.91
2x10P	11.43	19.00	2x27P	33.02	40.59	2x44P	54.61	62.18
2x11P	12.70	20.27	2x28P	34.29	41.86	2x45P	55.88	63.45
2x12P	13.97	21.54	2x29P	35.56	43.13	2x46P	57.15	64.72
2x13P	15.24	22.81	2x30P	36.83	44.41	2x47P	58.42	65.99
2x14P	16.51	24.08	2x31P	38.10	45.67	2x48P	59.69	67.26
2x15P	17.78	25.35	2x32P	39.37	46.94	2x49P	60.96	68.53
2x16P	19.05	26.62	2x33P	40.64	48.21	2x50P	62.23	69.80
2x17P	20.32	27.89	2x34P	41.91	49.48			
2x18P	21.59	29.16	2x35P	43.18	50.75			

HDGC 深圳市华德共创科技有限公司
Shenzhen Huade co-create Technology Co.,LTD
TEL：0755-27129737 FAX：0755-29940187

-TOLERANCES- UNLESS OTHERWISE SPECIFIED 公差参数表						TITLE: 产品名称：	1.27mm Pitch 180 ° Wafer		
X.X	±0.30	X.X°	±3°	APPD: 核准：	XIE	PART NO: 产品编号：	HDGC1276WV-N-S-2xXP		
X.XX	±0.30	X.XX°	±2°	CHECK: 校对：	WANG	DATE	SCALE	UNIT	CODE NUMBER
X.XXX	±0.10	X.XXX°	±1°	DRAW: 绘图：	WANG	2015-08-11	4:1	mm	A008

修订 REV	标记 MARK	修改摘要 REVISION DESCRIPTION	签名 SIGNA TURE	日期 DATE
A0		NEW RELEEASE	WANG	2017-11-20

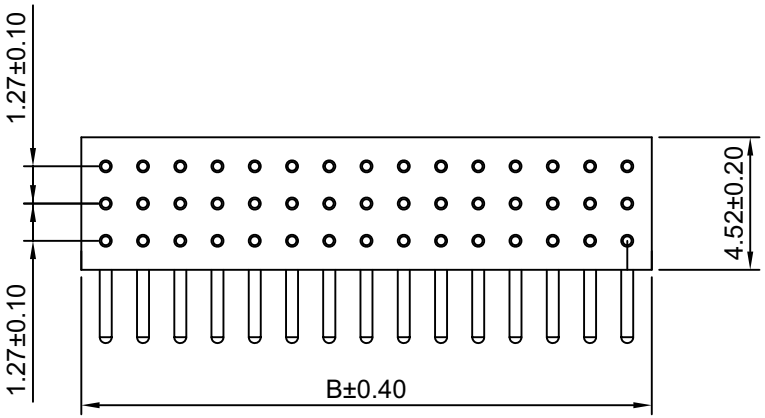

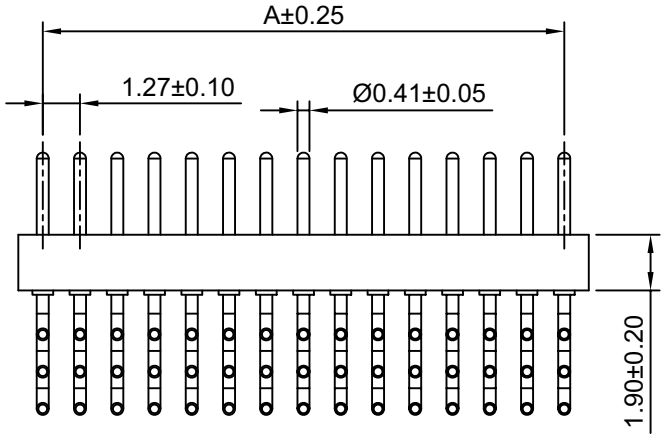

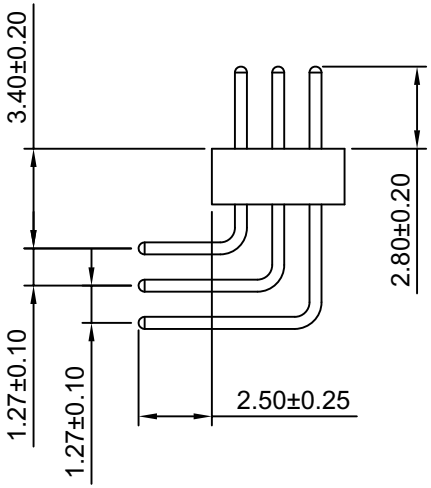

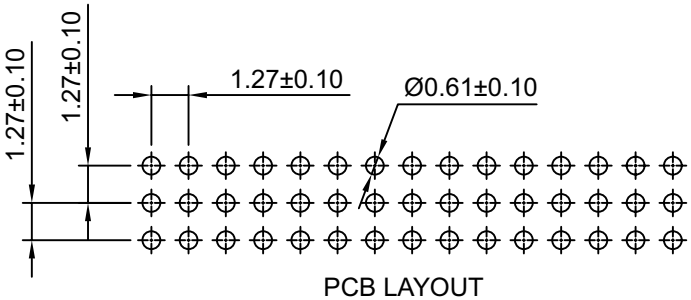

PCB LAYOUT

SPECIFICATIONS:

Current Rating: 1A AC,DC
Voltage Rating: 50V AC,DC
Temperature Range: -25°C ~ +85°C
Contact Resistance: 20MΩ Max.
Insulation Resistance: 1000MΩ Min.
Withstanding Voltage: 500V AC/minute
Pin Material: Brass/Tin over Nickel
Material: PBT,UL94V-0(Black)

Ordering Information & Dimensions

Circuits	Dimensions(mm)		Circuits	Dimensions(mm)	
	A	B		A	B
3x4P	3.81	5.08	3x13P	15.24	16.51
3x5P	5.08	6.35	3x14P	16.51	17.78
3x6P	6.35	7.62	3x15P	17.78	19.05
3x7P	7.62	8.89	3x16P	19.05	20.32
3x8P	8.89	10.16	3x17P	20.32	21.59
3x9P	10.16	11.43	3x18P	21.59	22.86
3x10P	11.43	12.70	3x19P	22.86	24.13
3x11P	12.70	13.97	3x20P	24.13	25.40
3x12P	13.97	15.24			

深圳市华德共创科技有限公司
Shenzhen Huade co-create Technology Co.,LTD
TEL：0755-27129737 FAX：0755-29940187

-TOLERANCES- UNLESS OTHERWISE SPECIFIED 公差参数表						TITLE: 产品名称：	1.27mm Pitch 90 ° Box Header		
X.X	±0.30	X.X°	±3°	APPD: 核准：	XIE	PART NO: 产品编号：	HDGC1276HWR-XP		
X.XX	±0.30	X.XX°	±2°	CHECK: 校对：	WANG	DATE	SCALE	UNIT	CODE NUMBER
X.XXX	±0.10	X.XXX°	±1°	DRAW: 绘图：	WANG	2017-11-20	5:1	mm	A008

修订 REV	标记 MARK	修改摘要 REVISION DESCRIPTION	签名 SIGNA TURE	日期 DATE
A0		NEW RELEEASE	WANG	2015-08-11

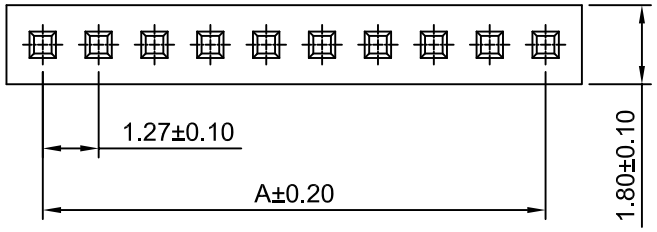

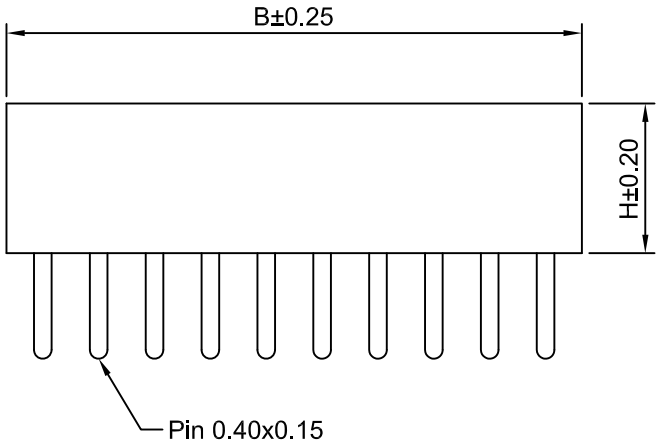

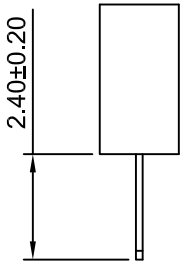

Type 1

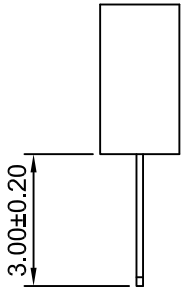

Type 2

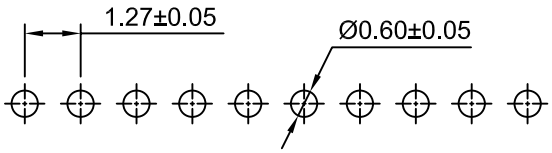

P.C.B LAYOUT

Ordering Information:

HDGC1276HWV-XP - XXX - X
1 2 3

1.Part No.
2.Size(H):
(blank):3.40mm
H40: 4.00mm
H43: 4.30mm
H46: 4.60mm
3.Type:
(blank):Type 1
H: Type2

SPECIFICATIONS:

Current Rating:1A AC,DC
Voltage Rating: 30V AC,DC
Temperature Range: -25°C ~ +85°C
Contact Resistance: 20mΩ Max
Insulation Resistance: 1000MΩ Min
Withstanding Voltage: 500V AC/minute
Pin Material:Phosphor Bronze,Glod-flash
Material: PBT,UL94V-0(Black)

Ordering Information & Dimensions

Circuits	Dimensions(mm)		Circuits	Dimensions(mm)	
	A	B		A	B
2P	1.27	2.92	17P	20.32	21.97
3P	2.54	4.19	18P	21.59	23.24
4P	3.81	5.46	19P	22.86	24.51
5P	5.08	6.73	20P	24.13	25.78
6P	6.35	8.00	21P	25.40	27.05
7P	7.62	9.27	22P	26.67	28.32
8P	8.89	10.54	23P	27.94	29.59
9P	10.16	11.81	24P	29.21	30.86
10P	11.43	13.08	25P	30.48	32.13
11P	12.70	14.35	26P	31.75	33.40
12P	13.97	15.62	27P	33.02	34.67
13P	15.24	16.89	28P	34.29	35.94
14P	16.51	18.16	29P	35.56	37.21
15P	17.78	19.43	30P	36.83	38.48
16P	19.05	20.70			

深圳市华德共创科技有限公司
Shenzhen Huade co-create Technology Co.,LTD
TEL：0755-27129737 FAX：0755-29940187

-TOLERANCES- UNLESS OTHERWISE SPECIFIED 公差参数表						TITLE: 产品名称：	1.27mm Pitch 90 ° Wafer		
X.X	±0.30	X.X°	±3°	APPD: 核准：	XIE	PART NO: 产品编号：	HDGC1276WR-3xXP-R		
X.XX	±0.30	X.XX°	±2°	CHECK: 校对：	WANG	DATE	SCALE	UNIT	CODE NUMBER
X.XXX	±0.10	X.XXX°	±1°	DRAW: 绘图：	WANG	2015-08-11	4:1	mm	A008

修订 REV	标记 MARK	修改摘要 REVISION DESCRIPTION	签名 SIGNA TURE	日期 DATE
A0		NEW RELEEASE	WANG	2014-07-10

Ordering Information:

HDGC1276HWR-XP - *** - ***
1 2 3

1.Part No.
2.Size(H):
(blank):4.30mm(D:2.40mm)
H34: 3.40mm(D:2.00mm)
3.Material:
(Blank):Nylon 6T,UL94V-0
GWT :Nylon 6T,UL94V-0 GWT 750℃

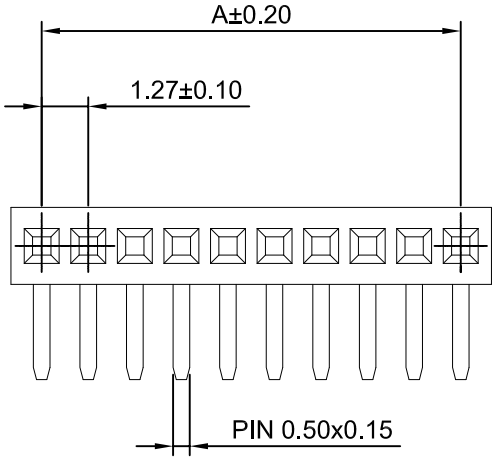

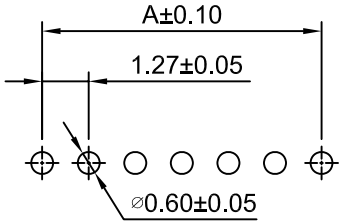

P.C.B LAYOUT

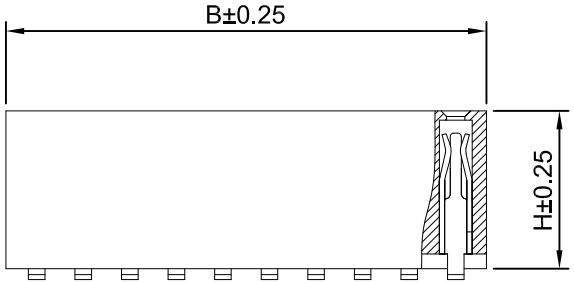

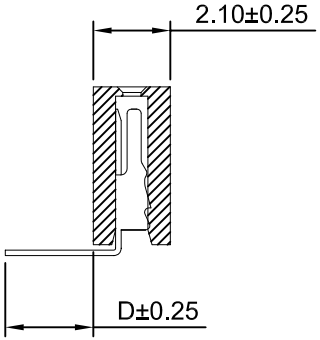

SPECIFICATIONS:

Current Rating: 1A AC,DC
Voltage Rating: 30V AC,DC
Temperature Range: -25°C ~ +85°C
Contact Resistance: 20mΩ Max
Insulation Resistance: 1000MΩ Min
Withstanding Voltage: 500V AC/minute
Pin Material:Phosphor Bronze/Gold over Nickel
Material: Nylon 6T ,UL94V-0(Black)

Ordering Information & Dimensions

Circuits	Dim(mm)		Circuits	Dim(mm)		Circuits	Dim(mm)	
	A	B		A	B		A	B
1P	----	1.67	18P	21.59	23.26	35P	43.18	44.96
2P	1.27	2.94	19P	22.86	24.53	36P	44.45	46.12
3P	2.54	4.21	20P	24.13	25.80	37P	45.72	47.39
4P	3.81	5.48	21P	25.40	27.07	38P	46.99	48.66
5P	5.08	6.75	22P	26.67	28.34	39P	48.26	49.93
6P	6.35	8.02	23P	27.94	29.61	40P	49.53	51.20
7P	7.62	9.29	24P	29.21	30.88	41P	50.80	52.47
8P	8.89	10.56	25P	30.48	32.15	42P	52.07	53.74
9P	10.16	11.83	26P	31.75	33.42	43P	53.34	55.01
10P	11.43	13.10	27P	33.02	34.69	44P	54.61	56.28
11P	12.70	14.37	28P	34.29	35.96	45P	55.88	57.55
12P	13.97	15.64	29P	35.56	37.23	46P	57.15	58.82
13P	15.24	16.91	30P	36.83	38.50	47P	58.42	60.09
14P	16.51	18.18	31P	38.10	39.77	48P	59.69	61.36
15P	17.78	19.45	32P	39.37	41.04	49P	60.96	62.63
16P	19.05	20.72	33P	40.64	42.31	50P	62.23	63.90
17P	20.32	21.99	34P	41.91	43.58			

深圳市华德共创科技有限公司
Shenzhen Huade co-create Technology Co.,LTD
TEL：0755-27129737 FAX：0755-29940187

-TOLERANCES- UNLESS OTHERWISE SPECIFIED 公差参数表						TITLE: 产品名称：	1.27mm Pitch 180 ° Female Header		
X.X	±0.30	X.X°	±3°	APPD: 核准：	XIE	PART NO: 产品编号：	HDGC1276HWV-XP		
X.XX	±0.30	X.XX°	±2°	CHECK: 校对：	WANG	DATE	SCALE	UNIT	CODE NUMBER
X.XXX	±0.10	X.XXX°	±1°	DRAW: 绘图：	WANG	2014-07-10	6:1	mm	A008

修订 REV	标记 MARK	修改摘要 REVISION DESCRIPTION	签名 SIGNA TURE	日期 DATE
A0		NEW RELEEASE	WANG	2017-11-20

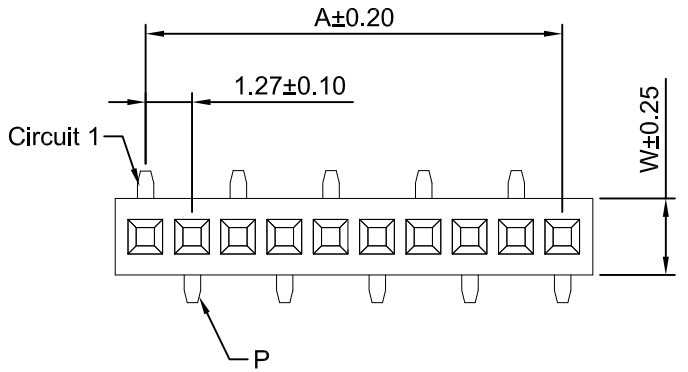

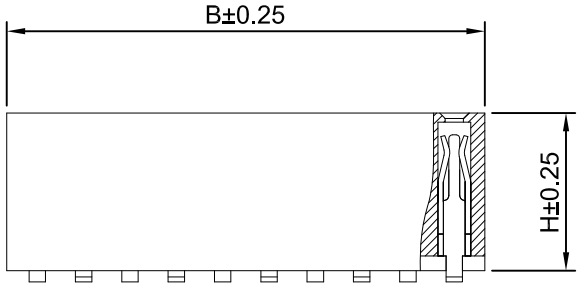

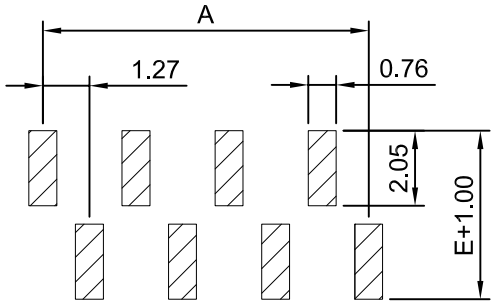

P.C.B LAYOUT

Ordering Information:

HDGC1276HWV-S-XP-A - *** *** *** - ***
1 2 3 4 5

1.Part No.
2.Size(H):
(blank):4.30mm(P:Pin 0.50*0.15)
H57: 5.70mm(P:Pin 0.40*0.20)
H34: 3.40mm(P:Pin 0.50*0.15)
H20: 2.00mm(P:Pin 0.40*0.15)
3.Size(W):
(blank):2.10mm
W25: 2.50mm
W18: 1.80mm
4.Size(E):
(blank):3.60mm
E43:4.30mm
E34:3.40mm
5.Material:
(Blank):Nylon 6T,UL94V-0
GWT :Nylon 6T,UL94V-0 GWT 750℃

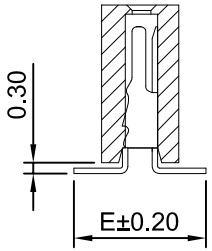

SPECIFICATIONS:

Current Rating:1A AC,DC
Voltage Rating: 30V AC,DC
Temperature Range: -25°C ~ +85°C
Contact Resistance: 20mΩ Max
Insulation Resistance: 1000MΩ Min
Withstanding Voltage: 500V AC/minute
Pin Material:Phosphor Bronze/Glod over Nickel
Material: Nylon6T,UL94V-0(Black)

Ordering Information & Dimensions

Circuits	Dim(mm)		Circuits	Dim(mm)		Circuits	Dim(mm)	
	A	B		A	B		A	B
1P	----	1.67	18P	21.59	23.26	35P	43.18	44.96
2P	1.27	2.94	19P	22.86	24.53	36P	44.45	46.12
3P	2.54	4.21	20P	24.13	25.80	37P	45.72	47.39
4P	3.81	5.48	21P	25.40	27.07	38P	46.99	48.66
5P	5.08	6.75	22P	26.67	28.34	39P	48.26	49.93
6P	6.35	8.02	23P	27.94	29.61	40P	49.53	51.20
7P	7.62	9.29	24P	29.21	30.88	41P	50.80	52.47
8P	8.89	10.56	25P	30.48	32.15	42P	52.07	53.74
9P	10.16	11.83	26P	31.75	33.42	43P	53.34	55.01
10P	11.43	13.10	27P	33.02	34.69	44P	54.61	56.28
11P	12.70	14.37	28P	34.29	35.96	45P	55.88	57.55
12P	13.97	15.64	29P	35.56	37.23	46P	57.15	58.82
13P	15.24	16.91	30P	36.83	38.50	47P	58.42	60.09
14P	16.51	18.18	31P	38.10	39.77	48P	59.69	61.36
15P	17.78	19.45	32P	39.37	41.04	49P	60.96	62.63
16P	19.05	20.72	33P	40.64	42.31	50P	62.23	63.90
17P	20.32	21.99	34P	41.91	43.58			

深圳市华德共创科技有限公司
Shenzhen Huade co-create Technology Co.,LTD
TEL：0755-27129737 FAX：0755-29940187

-TOLERANCES- UNLESS OTHERWISE SPECIFIED 公差参数表						TITLE: 产品名称：	1.27mm Pitch 180 ° Box Header		
X.X	±0.30	X.X°	±3°	APPD: 核准：	XIE	PART NO: 产品编号：	HDGC1276HWV-S-XP-A		
X.XX	±0.30	X.XX°	±2°	CHECK: 校对：	WANG	DATE	SCALE	UNIT	CODE NUMBER
X.XXX	±0.10	X.XXX°	±1°	DRAW: 绘图：	WANG	2017-11-20	5:1	mm	A008

修订 REV	标记 MARK	修改摘要 REVISION DESCRIPTION	签名 SIGNA TURE	日期 DATE
A0		NEW RELEEASE	WANG	2017-11-20

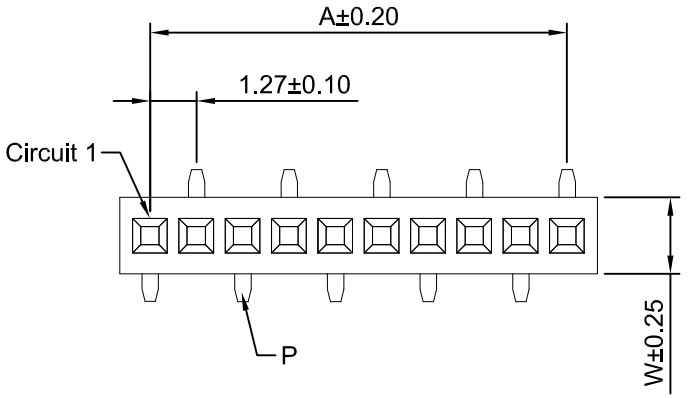

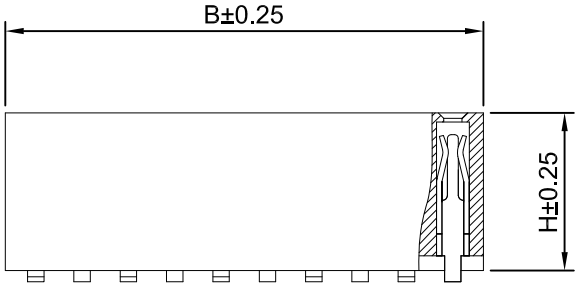

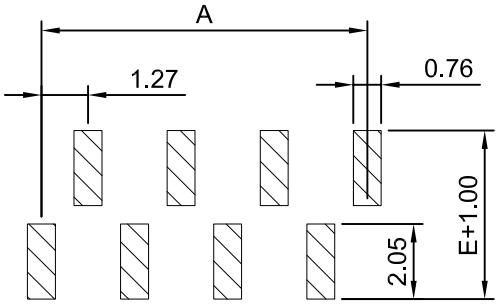

P.C.B LAYOUT

Ordering Information:

HDGC1276HWV-S-XP-B - *** *** *** - ***
1 2 3 4 5

1.Part No.
2.Size(H):
(blank):4.30mm(P:Pin 0.50*0.15)
H57: 5.70mm(P:Pin 0.40*0.20)
H34: 3.40mm(P:Pin 0.50*0.15)
H20: 2.00mm(P:Pin 0.40*0.15)
3.Size(W):
(blank):2.10mm
W25: 2.50mm
W18: 1.80mm
4.Size(E):
(blank):3.60mm
E43:4.30mm
E34:3.40mm
5.Material:
(Blank):Nylon 6T,UL94V-0
GWT :Nylon 6T,UL94V-0 GWT 750℃

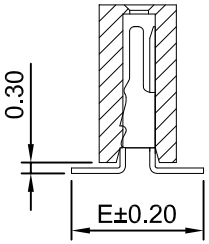

SPECIFICATIONS:

Current Rating:1A AC,DC
Voltage Rating: 30V AC,DC
Temperature Range: -25°C ~ +85°C
Contact Resistance: 20mΩ Max
Insulation Resistance: 1000MΩ Min
Withstanding Voltage: 500V AC/minute
Pin Material:Phosphor Bronze/Glod over Nickel
Material: Nylon6T,UL94V-0(Black)

Ordering Information & Dimensions

Circuits	Dim(mm)		Circuits	Dim(mm)		Circuits	Dim(mm)	
	A	B		A	B		A	B
1P	----	1.67	18P	21.59	23.26	35P	43.18	44.96
2P	1.27	2.94	19P	22.86	24.53	36P	44.45	46.12
3P	2.54	4.21	20P	24.13	25.80	37P	45.72	47.39
4P	3.81	5.48	21P	25.40	27.07	38P	46.99	48.66
5P	5.08	6.75	22P	26.67	28.34	39P	48.26	49.93
6P	6.35	8.02	23P	27.94	29.61	40P	49.53	51.20
7P	7.62	9.29	24P	29.21	30.88	41P	50.80	52.47
8P	8.89	10.56	25P	30.48	32.15	42P	52.07	53.74
9P	10.16	11.83	26P	31.75	33.42	43P	53.34	55.01
10P	11.43	13.10	27P	33.02	34.69	44P	54.61	56.28
11P	12.70	14.37	28P	34.29	35.96	45P	55.88	57.55
12P	13.97	15.64	29P	35.56	37.23	46P	57.15	58.82
13P	15.24	16.91	30P	36.83	38.50	47P	58.42	60.09
14P	16.51	18.18	31P	38.10	39.77	48P	59.69	61.36
15P	17.78	19.45	32P	39.37	41.04	49P	60.96	62.63
16P	19.05	20.72	33P	40.64	42.31	50P	62.23	63.90
17P	20.32	21.99	34P	41.91	43.58			

深圳市华德共创科技有限公司
Shenzhen Huade co-create Technology Co.,LTD
TEL：0755-27129737 FAX：0755-29940187

-TOLERANCES- UNLESS OTHERWISE SPECIFIED 公差参数表						TITLE: 产品名称：	1.27mm Pitch 180 ° Box Header		
X.X	±0.30	X.X°	±3°	APPD: 核准：	XIE	PART NO: 产品编号：	HDGC1276HWV-S-XP-B		
X.XX	±0.30	X.XX°	±2°	CHECK: 校对：	WANG	DATE	SCALE	UNIT	CODE NUMBER
X.XXX	±0.10	X.XXX°	±1°	DRAW: 绘图：	WANG	2017-11-20	5:1	mm	A008

修订 REV	标记 MARK	修改摘要 REVISION DESCRIPTION	签名 SIGNA TURE	日期 DATE
A0		NEW RELEEASE	WANG	2017-11-20

Ordering Information:

HDGC1276HWR-S-XP - *** - ***
1 2 3

1.Part No.
2.Size(H):
(blank):4.30mm(D:2.80mm)
H34: 3.40mm(D:1.70mm)
3.Material:
(blank):Nylon 6T ,UL94V-0
9T:Nylon 9T ,UL94V-0

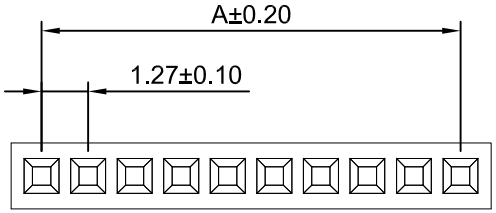

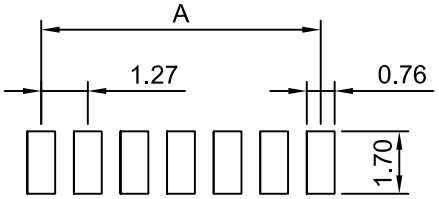

P.C.B LAYOUT

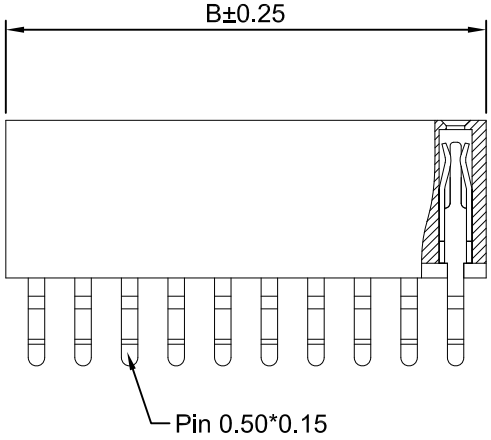

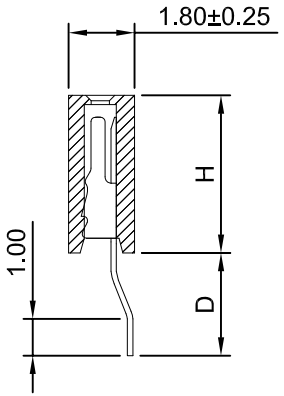

SPECIFICATIONS:

Current Rating: 1A AC,DC
Voltage Rating: 30V AC,DC
Temperature Range: -25°C ~ +85°C
Contact Resistance: 20mΩ Max
Insulation Resistance: 1000MΩ Min
Withstanding Voltage: 500V AC/minute
Pin Material:Phosphor Bronze/Gold over Nickel
Material: Nylon 6T ,UL94V-0(Black)

Ordering Information & Dimensions

Circuits	Dim(mm)		Circuits	Dim(mm)		Circuits	Dim(mm)	
	A	B		A	B		A	B
2P	1.27	2.94	15P	17.78	19.45	28P	34.29	35.96
3P	2.54	4.21	16P	19.05	20.72	29P	35.56	37.23
4P	3.81	5.48	17P	20.32	21.99	30P	36.83	38.50
5P	5.08	6.75	18P	21.59	23.26	31P	38.10	39.77
6P	6.35	8.02	19P	22.86	24.53	32P	39.37	41.04
7P	7.62	9.29	20P	24.13	25.90	33P	40.64	42.31
8P	8.89	10.56	21P	25.40	27.07	34P	41.91	43.58
9P	10.16	11.83	22P	26.67	28.34	35P	43.18	44.85
10P	11.43	13.10	23P	27.94	29.61	36P	44.45	46.12
11P	12.70	14.37	24P	29.21	30.88	37P	45.72	47.39
12P	13.97	15.64	25P	30.48	32.15	38P	46.99	48.66
13P	15.24	16.91	26P	31.75	33.42	39P	48.26	49.93
14P	16.51	18.18	27P	33.02	34.69	40P	49.53	51.20

深圳市华德共创科技有限公司
Shenzhen Huade co-create Technology Co.,LTD
TEL：0755-27129737 FAX：0755-29940187

-TOLERANCES- UNLESS OTHERWISE SPECIFIED 公差参数表									
X.X	±0.30	X.X°	±3°	APPD: 核准：	XIE	TITLE: 产品名称：	1.27mm Pitch 90 ° Box Header		
X.XX	±0.30	X.XX°	±2°	CHECK: 校对：	WANG	DATE	SCALE	UNIT	CODE NUMBER
X.XXX	±0.10	X.XXX°	±1°	DRAW: 绘图：	WANG	2017-11-20	5:1	mm	A008
						PART NO: 产品编号：	HDGC1276HWR-S-XP		

修订 REV	标记 MARK	修改摘要 REVISION DESCRIPTION	签名 SIGNA TURE	日期 DATE
A0		NEW RELEEASE	WANG	2017-11-20

Ordering Information:

HDGC1276HWV-XP-H46-Y - *** - ***
1 2 3

1.Part No.
2.Size(D):
(blank):2.40mm
D30:3.00mm
3.Material:
(Blank):Nylon 6T,UL94V-0
GWT :Nylon 6T,UL94V-0 GWT 750℃

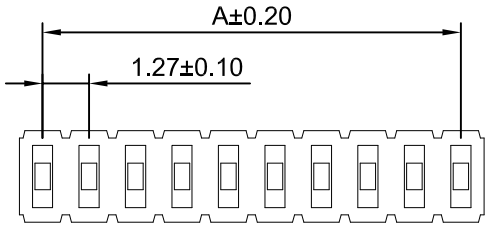

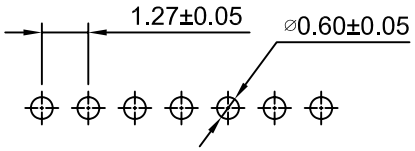

P.C.B LAYOUT

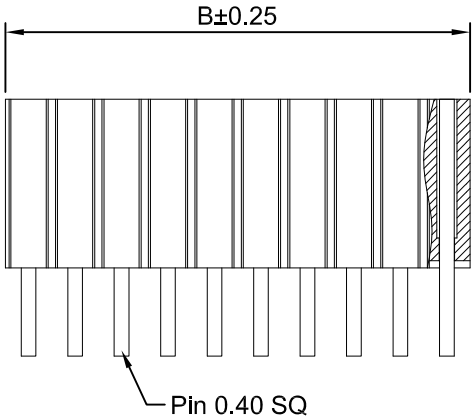

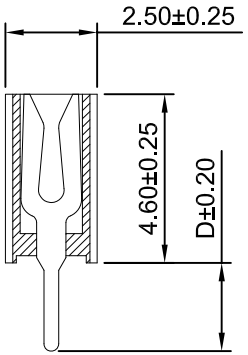

SPECIFICATIONS:

Current Rating:1A AC,DC
Voltage Rating: 30V AC,DC
Temperature Range: -25°C ~ +85°C
Contact Resistance: 20mΩ Max
Insulation Resistance: 1000MΩ Min
Withstanding Voltage: 500V AC/minute
Pin Material:Phosphor Bronze/Glod over Nickel
Material: Nylon6T,UL94V-0(Black)

Ordering Information & Dimensions

Circuits	Dim(mm)		Circuits	Dim(mm)		Circuits	Dim(mm)	
	A	B		A	B		A	B
1P	----	1.27	18P	21.59	22.86	35P	43.18	44.45
2P	1.27	2.54	19P	22.86	24.13	36P	44.45	45.72
3P	2.54	3.81	20P	24.13	25.40	37P	45.72	46.99
4P	3.81	5.08	21P	25.40	26.67	38P	46.99	48.26
5P	5.08	6.35	22P	26.67	27.94	39P	48.26	49.53
6P	6.35	7.62	23P	27.94	29.21	40P	49.53	50.80
7P	7.62	8.89	24P	29.21	30.48	41P	50.80	52.07
8P	8.89	10.16	25P	30.48	31.75	42P	52.07	53.34
9P	10.16	11.43	26P	31.75	33.02	43P	53.34	54.61
10P	11.43	12.70	27P	33.02	34.29	44P	54.61	55.88
11P	12.70	13.97	28P	34.29	35.56	45P	55.88	57.15
12P	13.97	15.24	29P	35.56	36.83	46P	57.15	58.42
13P	15.24	16.51	30P	36.83	38.10	47P	58.42	59.69
14P	16.51	17.78	31P	38.10	39.37	48P	59.69	60.96
15P	17.78	19.05	32P	39.37	40.64	49P	60.96	62.23
16P	19.05	20.32	33P	40.64	41.91	50P	62.23	63.50
17P	20.32	21.59	34P	41.91	43.18			

深圳市华德共创科技有限公司
Shenzhen Huade co-create Technology Co.,LTD
TEL：0755-27129737 FAX：0755-29940187

-TOLERANCES- UNLESS OTHERWISE SPECIFIED 公差参数表						TITLE: 产品名称：	1.27mm Pitch 180 ° Female Header		
X.X	±0.30	X.X°	±3°	APPD: 核准：	XIE	PART NO: 产品编号：	HDGC1276HWV-XP-H46-Y		
X.XX	±0.30	X.XX°	±2°	CHECK: 校对：	WANG	DATE	SCALE	UNIT	CODE NUMBER
X.XXX	±0.10	X.XXX°	±1°	DRAW: 绘图：	WANG	2017-11-20	5:1	mm	A008

修订 REV	标记 MARK	修改摘要 REVISION DESCRIPTION	签名 SIGNA TURE	日期 DATE
A0		NEW RELEEASE	WANG	2017-11-20

Ordering Information:

HDGC1276HWV-S-XP-A-H46-Y - ***
1 2

1.Part No.
2.Material:
(Blank):Nylon 6T,UL94V-0
GWT :Nylon 6T,UL94V-0 GWT 750 ℃

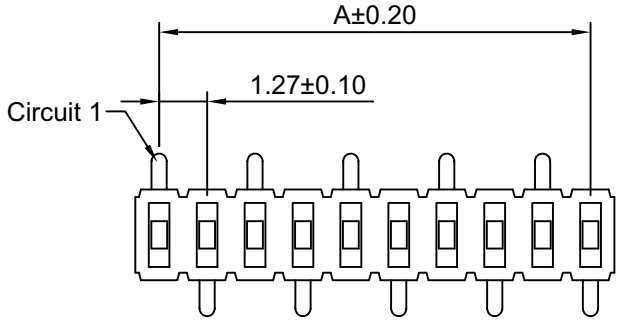

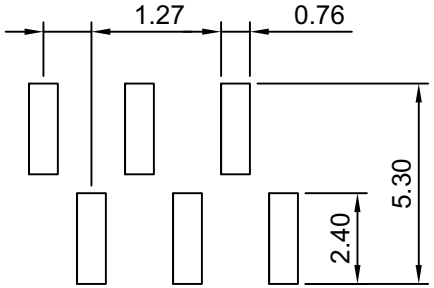

P.C.B LAYOUT

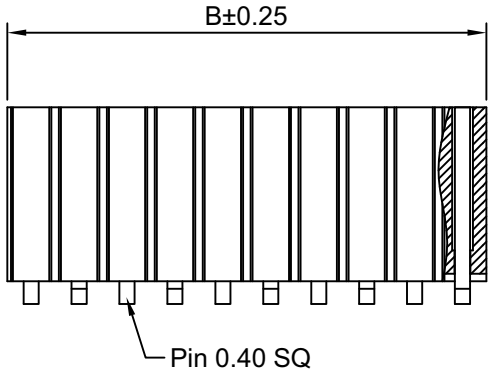

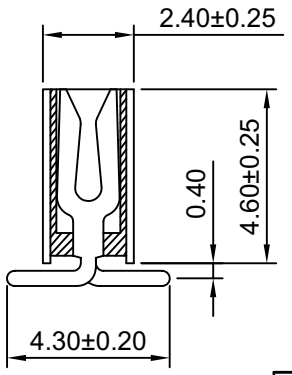

SPECIFICATIONS:

Current Rating:1A AC,DC
Voltage Rating: 30V AC,DC
Temperature Range: -25°C ~ +85°C
Contact Resistance: 20mΩ Max
Insulation Resistance: 1000MΩ Min
Withstanding Voltage: 500V AC/minute
Pin Material:Phosphor Bronze/Glod over Nickel
Material: Nylon6T,UL94V-0(Black)

Ordering Information & Dimensions

Circuits	Dim(mm)		Circuits	Dim(mm)		Circuits	Dim(mm)	
	A	B		A	B		A	B
1P	----	1.27	18P	21.59	22.86	35P	43.18	44.45
2P	1.27	2.54	19P	22.86	24.13	36P	44.45	45.72
3P	2.54	3.81	20P	24.13	25.40	37P	45.72	46.99
4P	3.81	5.08	21P	25.40	26.67	38P	46.99	48.26
5P	5.08	6.35	22P	26.67	27.94	39P	48.26	49.53
6P	6.35	7.62	23P	27.94	29.21	40P	49.53	50.80
7P	7.62	8.89	24P	29.21	30.48	41P	50.80	52.07
8P	8.89	10.16	25P	30.48	31.75	42P	52.07	53.34
9P	10.16	11.43	26P	31.75	33.02	43P	53.34	54.61
10P	11.43	12.70	27P	33.02	34.29	44P	54.61	55.88
11P	12.70	13.97	28P	34.29	35.56	45P	55.88	57.15
12P	13.97	15.24	29P	35.56	36.83	46P	57.15	58.42
13P	15.24	16.51	30P	36.83	38.10	47P	58.42	59.69
14P	16.51	17.78	31P	38.10	39.37	48P	59.69	60.96
15P	17.78	19.05	32P	39.37	40.64	49P	60.96	62.23
16P	19.05	20.32	33P	40.64	41.91	50P	62.23	63.50
17P	20.32	21.59	34P	41.91	43.18			

深圳市华德共创科技有限公司
Shenzhen Huade co-create Technology Co.,LTD
TEL：0755-27129737 FAX：0755-29940187

-TOLERANCES- UNLESS OTHERWISE SPECIFIED 公差参数表						TITLE: 产品名称：	1.27mm Pitch 180 ° Female Header		
X.X	±0.30	X.X°	±3°	APPD: 核准：	XIE	PART NO: 产品编号：	HDGC1276HWV-S-XP-A-H46-Y		
X.XX	±0.30	X.XX°	±2°	CHECK: 校对：	WANG	DATE	SCALE	UNIT	CODE NUMBER
X.XXX	±0.10	X.XXX°	±1°	DRAW: 绘图：	WANG	2017-11-20	5:1	mm	A008

修订 REV	标记 MARK	修改摘要 REVISION DESCRIPTION	签名 SIGNA TURE	日期 DATE
A0		NEW RELEEASE	WANG	2017-11-20

Ordering Information:

HDGC1276HWV-S-XP-B-H46-Y - ***

1 2

1.Part No.

2.Material:

(Blank):Nylon 6T,UL94V-0

GWT :Nylon 6T,UL94V-0 GWT 750 ℃

SPECIFICATIONS:

Current Rating:1A AC,DC

Voltage Rating: 30V AC,DC

Temperature Range: -25°C ~ +85°C

Contact Resistance: 20mΩ Max

Insulation Resistance: 1000MΩ Min

Withstanding Voltage: 500V AC/minute

Pin Material:Phosphor Bronze/Glod over Nickel

Material: Nylon6T,UL94V-0(Black)

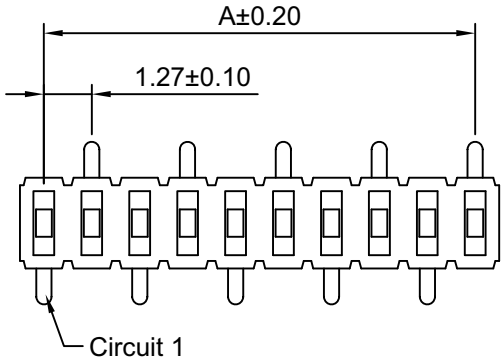

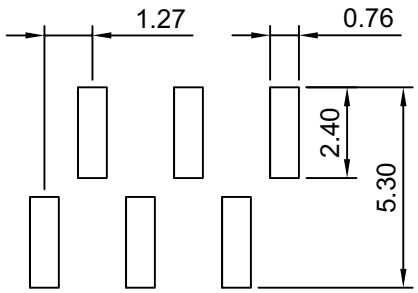

P.C.B LAYOUT

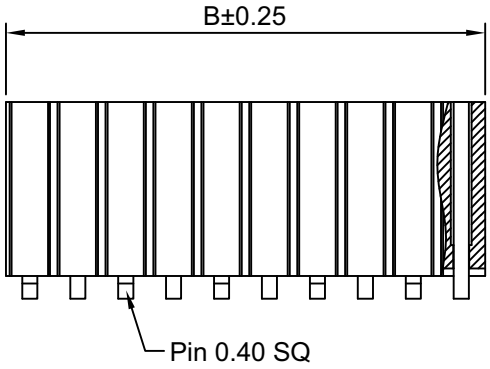

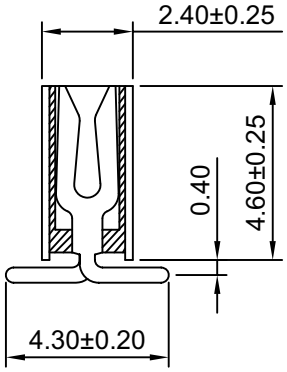

Ordering Information & Dimensions

Circuits	Dim(mm)		Circuits	Dim(mm)		Circuits	Dim(mm)	
	A	B		A	B		A	B
1P	----	1.27	18P	21.59	22.86	35P	43.18	44.45
2P	1.27	2.54	19P	22.86	24.13	36P	44.45	45.72
3P	2.54	3.81	20P	24.13	25.40	37P	45.72	46.99
4P	3.81	5.08	21P	25.40	26.67	38P	46.99	48.26
5P	5.08	6.35	22P	26.67	27.94	39P	48.26	49.53
6P	6.35	7.62	23P	27.94	29.21	40P	49.53	50.80
7P	7.62	8.89	24P	29.21	30.48	41P	50.80	52.07
8P	8.89	10.16	25P	30.48	31.75	42P	52.07	53.34
9P	10.16	11.43	26P	31.75	33.02	43P	53.34	54.61
10P	11.43	12.70	27P	33.02	34.29	44P	54.61	55.88
11P	12.70	13.97	28P	34.29	35.56	45P	55.88	57.15
12P	13.97	15.24	29P	35.56	36.83	46P	57.15	58.42
13P	15.24	16.51	30P	36.83	38.10	47P	58.42	59.69
14P	16.51	17.78	31P	38.10	39.37	48P	59.69	60.96
15P	17.78	19.05	32P	39.37	40.64	49P	60.96	62.23
16P	19.05	20.32	33P	40.64	41.91	50P	62.23	63.50
17P	20.32	21.59	34P	41.91	43.18			

深圳市华德共创科技有限公司

Shenzhen Huade co-create Technology Co.,LTD

TEL：0755-27129737 FAX：0755-29940187

-TOLERANCES- UNLESS OTHERWISE SPECIFIED 公差参数表						TITLE: 产品名称：	1.27mm Pitch 180 ° Female Header		
X.X	±0.30	X.X°	±3°	APPD: 核准：	XIE	PART NO: 产品编号：	HDGC1276HWV-S-XP-B-H46-Y		
X.XX	±0.30	X.XX°	±2°	CHECK: 校对：	WANG	DATE	SCALE	UNIT	CODE NUMBER
X.XXX	±0.10	X.XXX°	±1°	DRAW: 绘图：	WANG	2017-11-20	5:1	mm	A008

修订 REV	标记 MARK	修改摘要 REVISION DESCRIPTION	签名 SIGNA TURE	日期 DATE
A0		NEW RELEEASE	WANG	2017-11-20

Ordering Information:

HDGC1276HWR-S-F-XP-H57-Y - ***
1 2

1.Part No.
2.Material:
(Blank):Nylon 6T,UL94V-0
GWT :Nylon 6T,UL94V-0,GWT 750℃

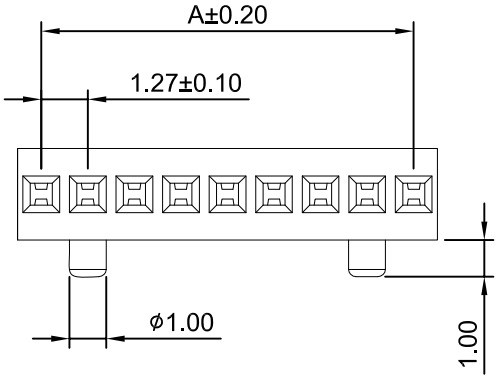

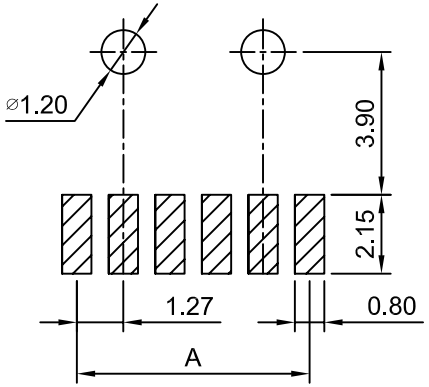

P.C.B LAYOUT

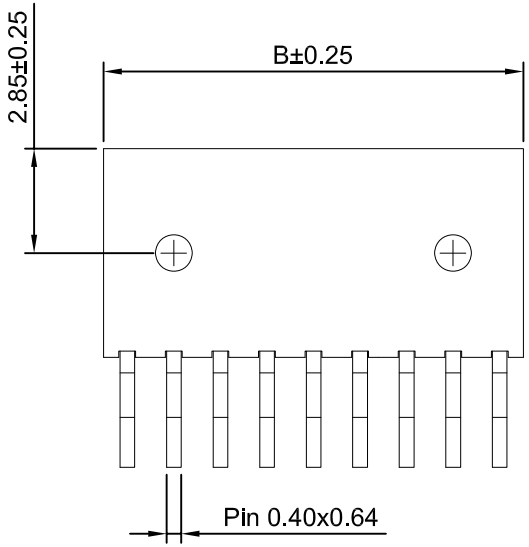

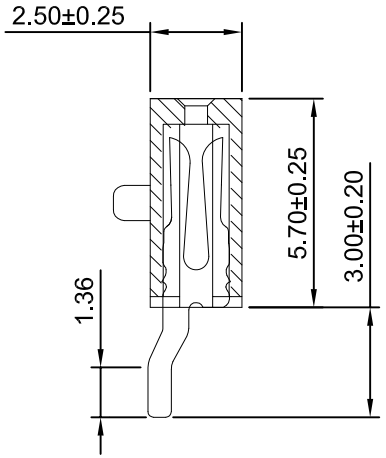

SPECIFICATIONS:

Current Rating:1A AC,DC
Voltage Rating: 30V AC,DC
Temperature Range:-25°C ~ +85°C
Contact Resistance: 20mΩ Max
Insulation Resistance: 1000MΩ Min
Withstanding Voltage: 500V AC/minute
Pin Material:Phosphor Bronze/Gold over Nickel
Material: Nylon 6T,UL94V-0(Black)

Ordering Information & Dimensions

Circuits	Dim(mm)		Circuits	Dim(mm)		Circuits	Dim(mm)	
	A	B		A	B		A	B
1P	----	1.27	18P	21.59	22.86	35P	43.18	44.45
2P	1.27	2.54	19P	22.86	24.13	36P	44.45	45.72
3P	2.54	3.81	20P	24.13	25.40	37P	45.72	46.99
4P	3.81	5.08	21P	25.40	26.67	38P	46.99	48.26
5P	5.08	6.35	22P	26.67	27.94	39P	48.26	49.53
6P	6.35	7.62	23P	27.94	29.21	40P	49.53	50.80
7P	7.62	8.89	24P	29.21	30.48	41P	50.80	52.07
8P	8.89	10.16	25P	30.48	31.75	42P	52.07	53.34
9P	10.16	11.43	26P	31.75	33.02	43P	53.34	54.61
10P	11.43	12.70	27P	33.02	34.29	44P	54.61	55.88
11P	12.70	13.97	28P	34.29	35.56	45P	55.88	57.15
12P	13.97	15.24	29P	35.56	36.83	46P	57.15	58.42
13P	15.24	16.51	30P	36.83	38.10	47P	58.42	59.69
14P	16.51	17.78	31P	38.10	39.37	48P	59.69	60.96
15P	17.78	19.05	32P	39.37	40.64	49P	60.96	62.23
16P	19.05	20.32	33P	40.64	41.91	50P	62.23	63.50
17P	20.32	21.59	34P	41.91	43.18			

HDGC 深圳市华德共创科技有限公司
Shenzhen Huade co-create Technology Co.,LTD
TEL：0755-27129737 FAX：0755-29940187

-TOLERANCES- UNLESS OTHERWISE SPECIFIED 公差参数表						TITLE: 产品名称：	1.27mm Pitch 90 ° Female Header		
X.X	±0.30	X.X°	±3°	APPD: 核准：	XIE	PART NO: 产品编号：	HDGC1276HWR-S-F-XP-H57-Y		
X.XX	±0.30	X.XX°	±2°	CHECK: 校对：	WANG	DATE	SCALE	UNIT	CODE NUMBER
X.XXX	±0.10	X.XXX°	±1°	DRAW: 绘图：	WANG	2017-11-20	5:1	mm	A008

修订 REV	标记 MARK	修改摘要 REVISION DESCRIPTION	签名 SIGNA TURE	日期 DATE
A0		NEW RELEEASE	WANG	2017-11-20

Ordering Information:

HDGC1276HWR-S-XP-H57-Y - ***
1 2

1.Part No.
2.Material:
(Blank):Nylon 6T,UL94V-0
GWT :Nylon 6T,UL94V-0,GWT 750℃

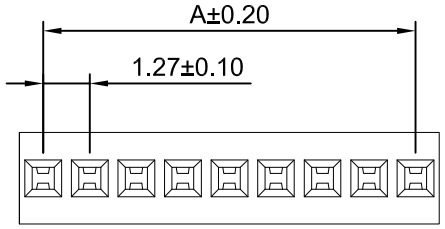

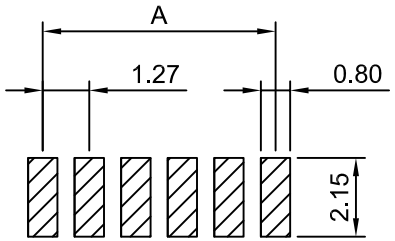

P.C.B LAYOUT

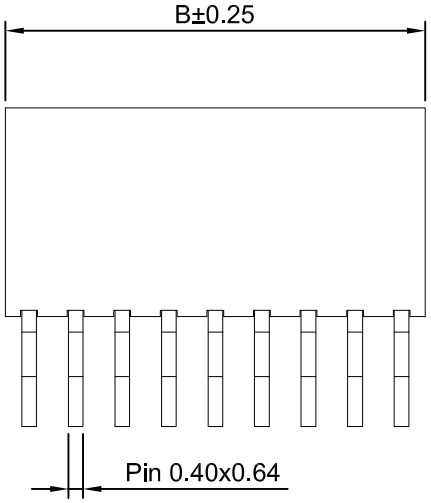

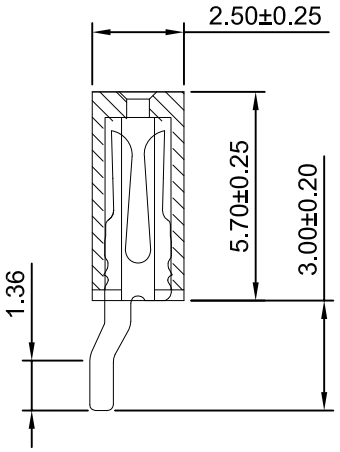

SPECIFICATIONS:

Current Rating:1A AC,DC
Voltage Rating: 30V AC,DC
Temperature Range:-25°C ~ +85°C
Contact Resistance: 20mΩ Max
Insulation Resistance: 1000MΩ Min
Withstanding Voltage: 500V AC/minute
Pin Material:Phosphor Bronze/Gold over Nickel
Material: Nylon 6T,UL94V-0(Black)

Ordering Information & Dimensions

Circuits	Dim(mm)		Circuits	Dim(mm)		Circuits	Dim(mm)	
	A	B		A	B		A	B
1P	----	1.27	18P	21.59	22.86	35P	43.18	44.45
2P	1.27	2.54	19P	22.86	24.13	36P	44.45	45.72
3P	2.54	3.81	20P	24.13	25.40	37P	45.72	46.99
4P	3.81	5.08	21P	25.40	26.67	38P	46.99	48.26
5P	5.08	6.35	22P	26.67	27.94	39P	48.26	49.53
6P	6.35	7.62	23P	27.94	29.21	40P	49.53	50.80
7P	7.62	8.89	24P	29.21	30.48	41P	50.80	52.07
8P	8.89	10.16	25P	30.48	31.75	42P	52.07	53.34
9P	10.16	11.43	26P	31.75	33.02	43P	53.34	54.61
10P	11.43	12.70	27P	33.02	34.29	44P	54.61	55.88
11P	12.70	13.97	28P	34.29	35.56	45P	55.88	57.15
12P	13.97	15.24	29P	35.56	36.83	46P	57.15	58.42
13P	15.24	16.51	30P	36.83	38.10	47P	58.42	59.69
14P	16.51	17.78	31P	38.10	39.37	48P	59.69	60.96
15P	17.78	19.05	32P	39.37	40.64	49P	60.96	62.23
16P	19.05	20.32	33P	40.64	41.91	50P	62.23	63.50
17P	20.32	21.59	34P	41.91	43.18			

深圳市华德共创科技有限公司
Shenzhen Huade co-create Technology Co.,LTD
TEL：0755-27129737 FAX：0755-29940187

-TOLERANCES- UNLESS OTHERWISE SPECIFIED 公差参数表									
X.X	±0.30	X.X°	±3°	APPD: 核准：	XIE	TITLE: 产品名称：	1.27mm Pitch 90 ° Female Header		
X.XX	±0.30	X.XX°	±2°	CHECK: 校对：	WANG	DATE	SCALE	UNIT	CODE NUMBER
X.XXX	±0.10	X.XXX°	±1°	DRAW: 绘图：	WANG	2017-11-20	5:1	mm	A008
				PART NO: 产品编号：	HDGC1276HWR-S-XP-H57-Y				

修订 REV	标记 MARK	修改摘要 REVISION DESCRIPTION	签名 SIGNA TURE	日期 DATE
A0		NEW RELEEASE	WANG	2017-11-20

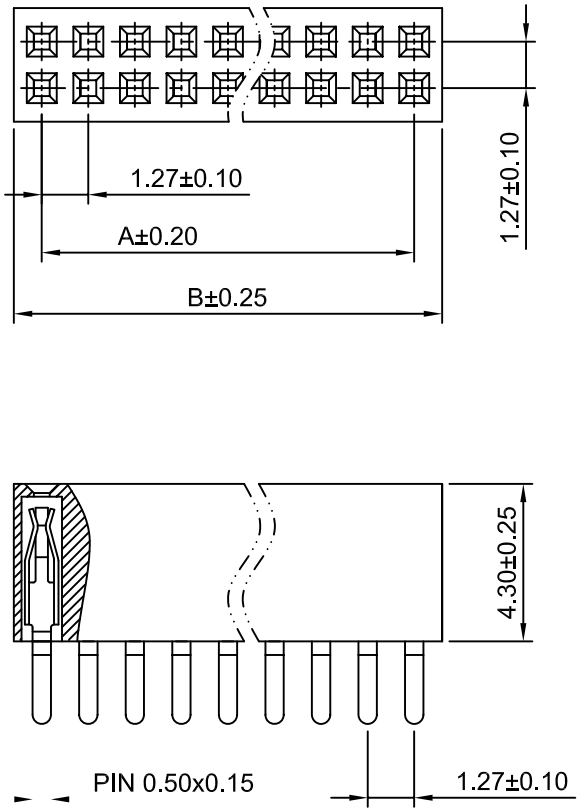

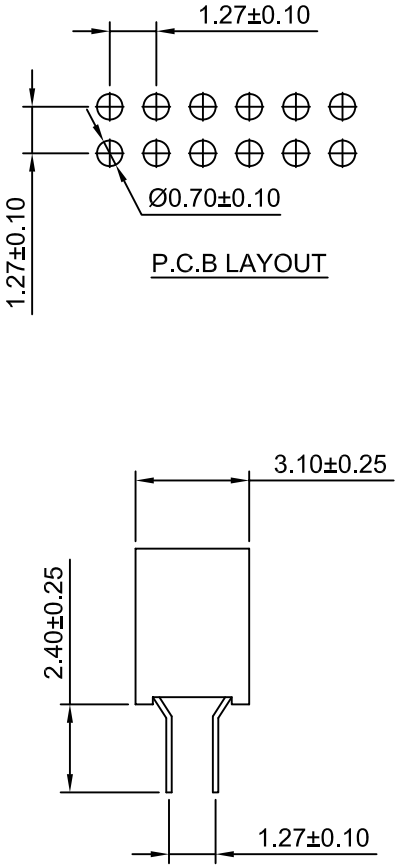

SPECIFICATIONS:

Current Rating: 1.0A AC,DC
Voltage Rating: 250V AC,DC
Temperature Range:-25°C ~ +85°C
Contact Resistance: 20mΩ Max
Insulation Resistance: 1000MΩ Min
Withstanding Voltage: 500V AC/minute
Pin Material:Phosphor Bronze/Gold over Nickel
Material:PA9T+30%GF,UL94V-0(Black)

Ordering Information & Dimensions

Circuits	Dim(mm)		Circuits	Dim(mm)		Circuits	Dim(mm)	
	A	B		A	B		A	B
2x2P	1.27	2.94	2x15P	17.78	19.45	2x28P	34.29	35.96
2x3P	2.54	4.21	2x16P	19.05	20.72	2x29P	35.56	37.23
2x4P	3.81	5.48	2x17P	20.32	21.99	2x30P	36.83	38.50
2x5P	5.08	6.75	2x18P	21.59	23.26	2x31P	38.10	39.77
2x6P	6.35	8.02	2x19P	22.86	24.53	2x32P	39.37	41.04
2x7P	7.62	9.29	2x20P	24.13	25.90	2x33P	40.64	42.31
2x8P	8.89	10.56	2x21P	25.40	27.07	2x34P	41.91	43.58
2x9P	10.16	11.83	2x22P	26.67	28.34	2x35P	43.18	44.85
2x10P	11.43	13.10	2x23P	27.94	29.61	2x36P	44.45	46.12
2x11P	12.70	14.37	2x24P	29.21	30.88	2x37P	45.72	47.39
2x12P	13.97	15.64	2x25P	30.48	32.15	2x38P	46.99	48.66
2x13P	15.24	16.91	2x26P	31.75	33.42	2x39P	48.26	49.93
2x14P	16.51	18.18	2x27P	33.02	34.69	2x40P	49.53	51.20

深圳市华德共创科技有限公司
Shenzhen Huade co-create Technology Co.,LTD
TEL：0755-27129737 FAX：0755-29940187

-TOLERANCES- UNLESS OTHERWISE SPECIFIED 公差参数表						TITLE: 产品名称：	1.27mm Pitch 180 ° Box Header		
X.X	±0.30	X.X°	±3°	APPD: 核准：	XIE	PART NO: 产品编号：	HDGC1276HWV-2xXP		
X.XX	±0.30	X.XX°	±2°	CHECK: 校对：	WANG	DATE	SCALE	UNIT	CODE NUMBER
X.XXX	±0.10	X.XXX°	±1°	DRAW: 绘图：	WANG	2017-11-20	5:1	mm	A008

修订 REV	标记 MARK	修改摘要 REVISION DESCRIPTION	签名 SIGNA TURE	日期 DATE
A0		NEW RELEEASE	WANG	2017-11-20

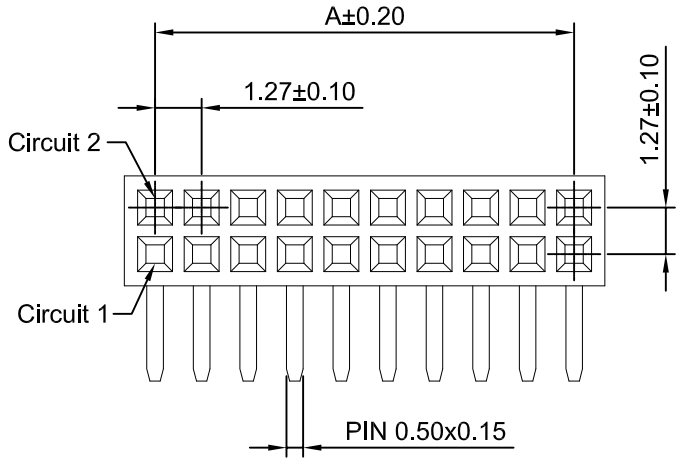

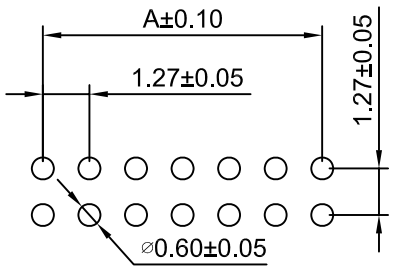

P.C.B LAYOUT

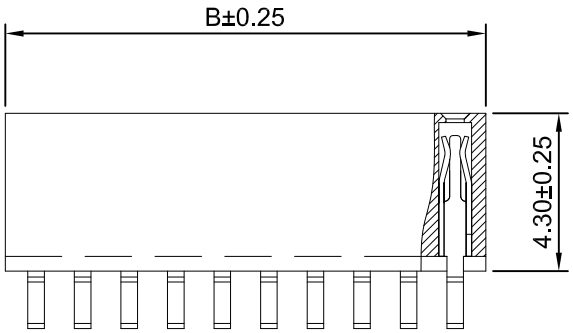

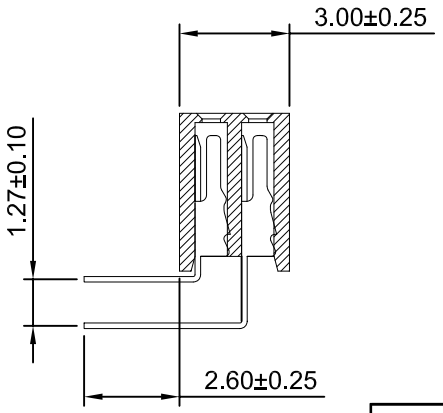

SPECIFICATIONS:

Current Rating: 1.0A AC,DC
Voltage Rating: 250V AC,DC
Temperature Range:-25°C ~ +85°C
Contact Resistance: 20mΩ Max
Insulation Resistance: 1000MΩ Min
Withstanding Voltage: 500V AC/minute
Pin Material:Phosphor Bronze/Gold over Nickel
Material: PA6T ,UL94V-0(Black)

Ordering Information & Dimensions

Circuits	Dim(mm)		Circuits	Dim(mm)		Circuits	Dim(mm)	
	A	B		A	B		A	B
2x2P	1.27	2.94	2x15P	17.78	19.45	2x28P	34.29	35.96
2x3P	2.54	4.21	2x16P	19.05	20.72	2x29P	35.56	37.23
2x4P	3.81	5.48	2x17P	20.32	21.99	2x30P	36.83	38.50
2x5P	5.08	6.75	2x18P	21.59	23.26	2x31P	38.10	39.77
2x6P	6.35	8.02	2x19P	22.86	24.53	2x32P	39.37	41.04
2x7P	7.62	9.29	2x20P	24.13	25.90	2x33P	40.64	42.31
2x8P	8.89	10.56	2x21P	25.40	27.07	2x34P	41.91	43.58
2x9P	10.16	11.83	2x22P	26.67	28.34	2x35P	43.18	44.85
2x10P	11.43	13.10	2x23P	27.94	29.61	2x36P	44.45	46.12
2x11P	12.70	14.37	2x24P	29.21	30.88	2x37P	45.72	47.39
2x12P	13.97	15.64	2x25P	30.48	32.15	2x38P	46.99	48.66
2x13P	15.24	16.91	2x26P	31.75	33.42	2x39P	48.26	49.93
2x14P	16.51	18.18	2x27P	33.02	34.69	2x40P	49.53	51.20

深圳市华德共创科技有限公司
Shenzhen Huade co-create Technology Co.,LTD
TEL：0755-27129737 FAX：0755-29940187

-TOLERANCES- UNLESS OTHERWISE SPECIFIED 公差参数表						TITLE: 产品名称：	1.27mm Pitch 90 ° Box Header		
X.X	±0.30	X.X°	±3°	APPD: 核准：	XIE	PART NO: 产品编号：	HDGC1276HWR-2xXP		
X.XX	±0.30	X.XX°	±2°	CHECK: 校对：	WANG	DATE	SCALE	UNIT	CODE NUMBER
X.XXX	±0.10	X.XXX°	±1°	DRAW: 绘图：	WANG	2017-11-20	5:1	mm	A008

修订 REV	标记 MARK	修改摘要 REVISION DESCRIPTION	签名 SIGNA TURE	日期 DATE
A0		NEW RELEEASE	WANG	2017-11-20

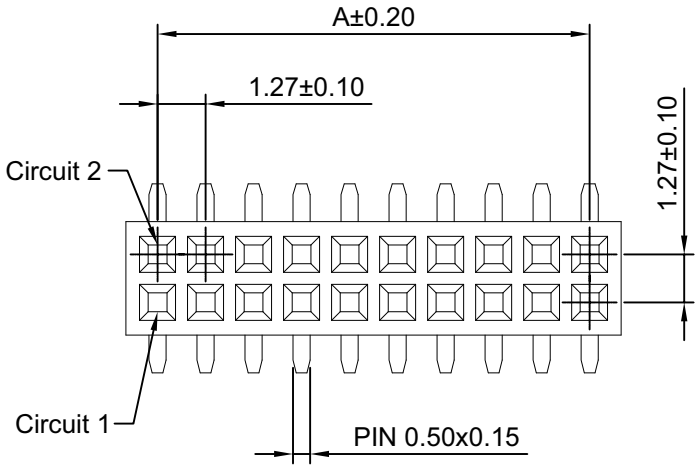

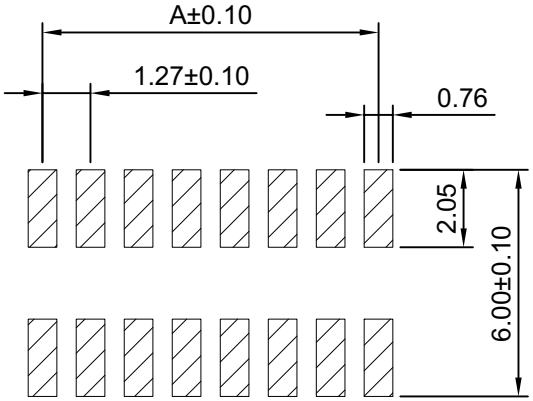

P.C.B LAYOUT

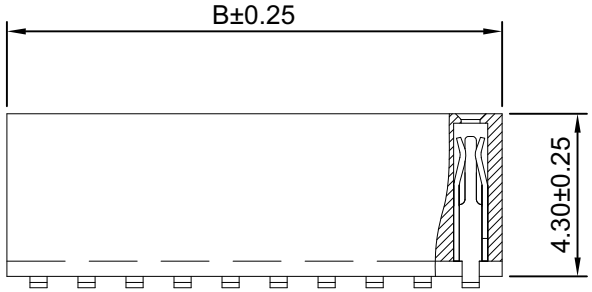

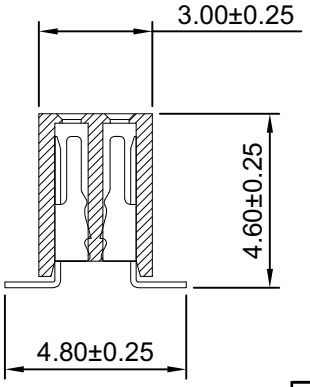

SPECIFICATIONS:

Current Rating: 1.0A AC,DC
Voltage Rating: 250V AC,DC
Temperature Range: -25°C ~ +85°C
Contact Resistance: 20mΩ Max
Insulation Resistance: 1000MΩ Min
Withstanding Voltage: 500V AC/minute
Pin Material:Phosphor Bronze/Gold over Nickel
Material: PA9T ,UL94V-0(Black)

Ordering Information & Dimensions

Circuits	Dim(mm)		Circuits	Dim(mm)		Circuits	Dim(mm)	
	A	B		A	B		A	B
2x2P	1.27	2.94	2x15P	17.78	19.45	2x28P	34.29	35.96
2x3P	2.54	4.21	2x16P	19.05	20.72	2x29P	35.56	37.23
2x4P	3.81	5.48	2x17P	20.32	21.99	2x30P	36.83	38.50
2x5P	5.08	6.75	2x18P	21.59	23.26	2x31P	38.10	39.77
2x6P	6.35	8.02	2x19P	22.86	24.53	2x32P	39.37	41.04
2x7P	7.62	9.29	2x20P	24.13	25.90	2x33P	40.64	42.31
2x8P	8.89	10.56	2x21P	25.40	27.07	2x34P	41.91	43.58
2x9P	10.16	11.83	2x22P	26.67	28.34	2x35P	43.18	44.85
2x10P	11.43	13.10	2x23P	27.94	29.61	2x36P	44.45	46.12
2x11P	12.70	14.37	2x24P	29.21	30.88	2x37P	45.72	47.39
2x12P	13.97	15.64	2x25P	30.48	32.15	2x38P	46.99	48.66
2x13P	15.24	16.91	2x26P	31.75	33.42	2x39P	48.26	49.93
2x14P	16.51	18.18	2x27P	33.02	34.69	2x40P	49.53	51.20

HDGC
深圳市华德共创科技有限公司
Shenzhen Huade co-create Technology Co.,LTD
TEL：0755-27129737 FAX：0755-29940187

-TOLERANCES- UNLESS OTHERWISE SPECIFIED 公差参数表						TITLE: 产品名称：	1.27mm Pitch 180 ° Box Header		
X.X	±0.30	X.X°	±3°	APPD: 核准：	XIE	PART NO: 产品编号：	HDGC1276HWV-S-2xXP		
X.XX	±0.30	X.XX°	±2°	CHECK: 校对：	WANG	DATE	SCALE	UNIT	CODE NUMBER
X.XXX	±0.10	X.XXX°	±1°	DRAW: 绘图：	WANG	2017-11-20	5:1	mm	A008

修订 REV	标记 MARK	修改摘要 REVISION DESCRIPTION	签名 SIGNA TURE	日期 DATE
A0		NEW RELEEASE	WANG	2017-11-20

Ordering Information:

HDGC1276HWR-S-2xXP - ***

1 2

1.Part No.

2.Material:

(Blank):Nylon 6T,UL94V-0

GWT :Nylon 6T,UL94V-0 GWT 750℃

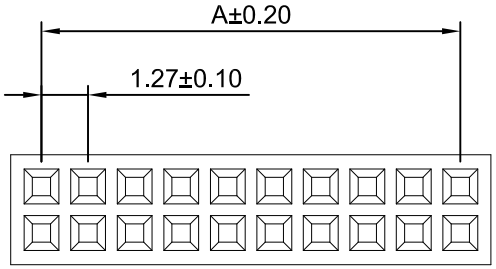

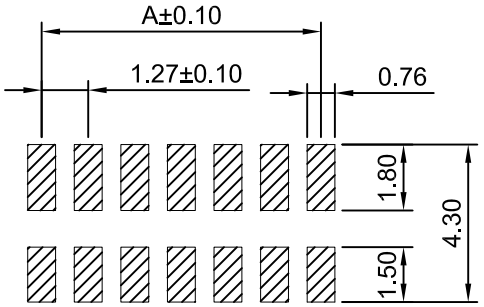

P.C.B LAYOUT

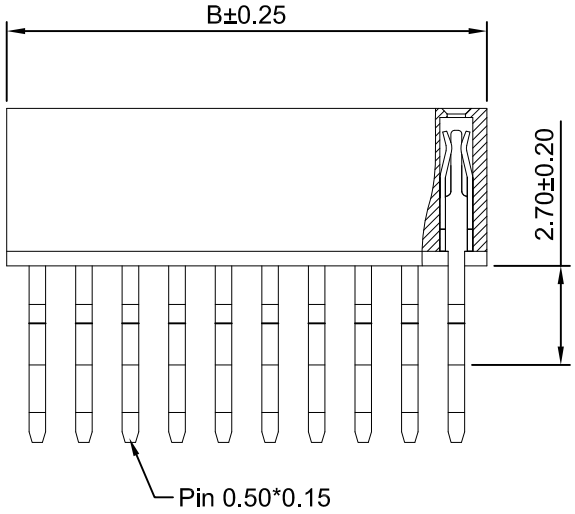

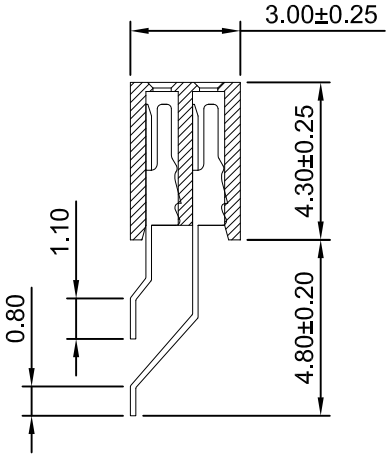

SPECIFICATIONS:

Current Rating: 1A AC,DC
Voltage Rating: 30V AC,DC
Temperature Range:-25°C ~ +85°C
Contact Resistance: 20mΩ Max
Insulation Resistance: 1000MΩ Min
Withstanding Voltage: 500V AC/minute
Pin Material:Phosphor Bronze/Gold over Nickel
Material: Nylon 6T ,UL94V-0(Black)

Ordering Information & Dimensions

Circuits	Dim(mm)		Circuits	Dim(mm)		Circuits	Dim(mm)	
	A	B		A	B		A	B
2x2P	1.27	2.94	2x15P	17.78	19.45	2x28P	34.29	35.96
2x3P	2.54	4.21	2x16P	19.05	20.72	2x29P	35.56	37.23
2x4P	3.81	5.48	2x17P	20.32	21.99	2x30P	36.83	38.50
2x5P	5.08	6.75	2x18P	21.59	23.26	2x31P	38.10	39.77
2x6P	6.35	8.02	2x19P	22.86	24.53	2x32P	39.37	41.04
2x7P	7.62	9.29	2x20P	24.13	25.90	2x33P	40.64	42.31
2x8P	8.89	10.56	2x21P	25.40	27.07	2x34P	41.91	43.58
2x9P	10.16	11.83	2x22P	26.67	28.34	2x35P	43.18	44.85
2x10P	11.43	13.10	2x23P	27.94	29.61	2x36P	44.45	46.12
2x11P	12.70	14.37	2x24P	29.21	30.88	2x37P	45.72	47.39
2x12P	13.97	15.64	2x25P	30.48	32.15	2x38P	46.99	48.66
2x13P	15.24	16.91	2x26P	31.75	33.42	2x39P	48.26	49.93
2x14P	16.51	18.18	2x27P	33.02	34.69	2x40P	49.53	51.20

HDGC 深圳市华德共创科技有限公司
Shenzhen Huade co-create Technology Co.,LTD
TEL：0755-27129737 FAX：0755-29940187

-TOLERANCES- UNLESS OTHERWISE SPECIFIED 公差参数表						TITLE: 产品名称：	1.27mm Pitch 90 ° Box Header		
X.X	±0.30	X.X°	±3°	APPD: 核准：	XIE	PART NO: 产品编号：	HDGC1276HWR-S-2xXP		
X.XX	±0.30	X.XX°	±2°	CHECK: 校对：	WANG	DATE	SCALE	UNIT	CODE NUMBER
X.XXX	±0.10	X.XXX°	±1°	DRAW: 绘图：	WANG	2017-11-20	5:1	mm	A008

修订 REV	标记 MARK	修改摘要 REVISION DESCRIPTION	签名 SIGNA TURE	日期 DATE
A0		NEW RELEEASE	WANG	2017-11-20

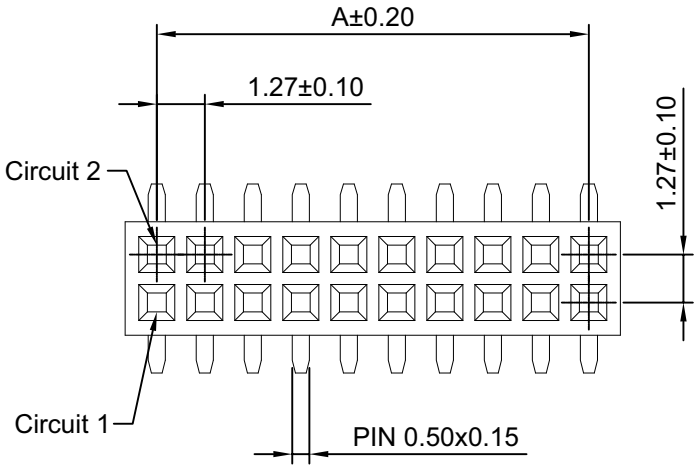

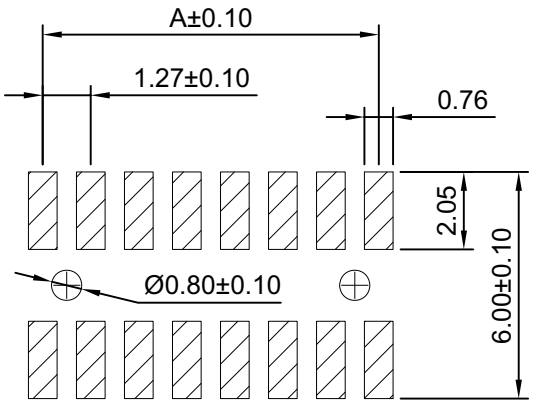

P.C.B LAYOUT

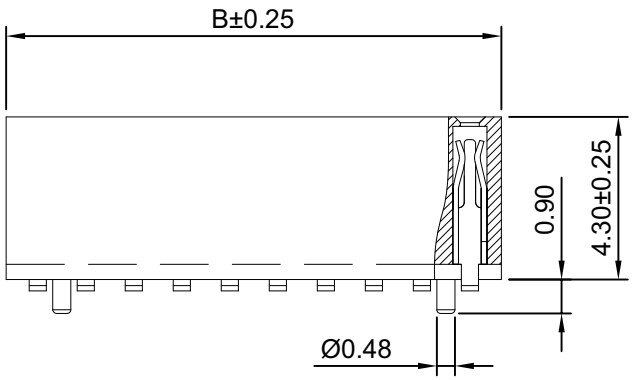

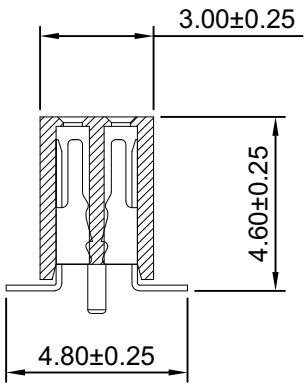

SPECIFICATIONS:

Current Rating: 1.0A AC,DC
Voltage Rating: 250V AC,DC
Temperature Range: -25°C ~ +85°C
Contact Resistance: 20mΩ Max
Insulation Resistance: 1000MΩ Min
Withstanding Voltage: 500V AC/minute
Pin Material:Phosphor Bronze/Gold over Nickel
Material: PA9T ,UL94V-0(Black)

Ordering Information & Dimensions

Circuits	Dim(mm)		Circuits	Dim(mm)		Circuits	Dim(mm)	
	A	B		A	B		A	B
2x2P	1.27	2.94	2x15P	17.78	19.45	2x28P	34.29	35.96
2x3P	2.54	4.21	2x16P	19.05	20.72	2x29P	35.56	37.23
2x4P	3.81	5.48	2x17P	20.32	21.99	2x30P	36.83	38.50
2x5P	5.08	6.75	2x18P	21.59	23.26	2x31P	38.10	39.77
2x6P	6.35	8.02	2x19P	22.86	24.53	2x32P	39.37	41.04
2x7P	7.62	9.29	2x20P	24.13	25.90	2x33P	40.64	42.31
2x8P	8.89	10.56	2x21P	25.40	27.07	2x34P	41.91	43.58
2x9P	10.16	11.83	2x22P	26.67	28.34	2x35P	43.18	44.85
2x10P	11.43	13.10	2x23P	27.94	29.61	2x36P	44.45	46.12
2x11P	12.70	14.37	2x24P	29.21	30.88	2x37P	45.72	47.39
2x12P	13.97	15.64	2x25P	30.48	32.15	2x38P	46.99	48.66
2x13P	15.24	16.91	2x26P	31.75	33.42	2x39P	48.26	49.93
2x14P	16.51	18.18	2x27P	33.02	34.69	2x40P	49.53	51.20

深圳市华德共创科技有限公司
Shenzhen Huade co-create Technology Co.,LTD
TEL：0755-27129737 FAX：0755-29940187

-TOLERANCES- UNLESS OTHERWISE SPECIFIED 公差参数表						TITLE: 产品名称：	1.27mm Pitch 180 ° Box Header		
X.X	±0.30	X.X°	±3°	APPD: 核准：	XIE	PART NO: 产品编号：	HDGC1276HWV-S-F-2xXP		
X.XX	±0.30	X.XX°	±2°	CHECK: 校对：	WANG	DATE	SCALE	UNIT	CODE NUMBER
X.XXX	±0.10	X.XXX°	±1°	DRAW: 绘图：	WANG	2017-11-20	5:1	mm	A008

修订 REV	标记 MARK	修改摘要 REVISION DESCRIPTION	签名 SIGNA TURE	日期 DATE
A0		NEW RELEEASE	WANG	2017-11-20

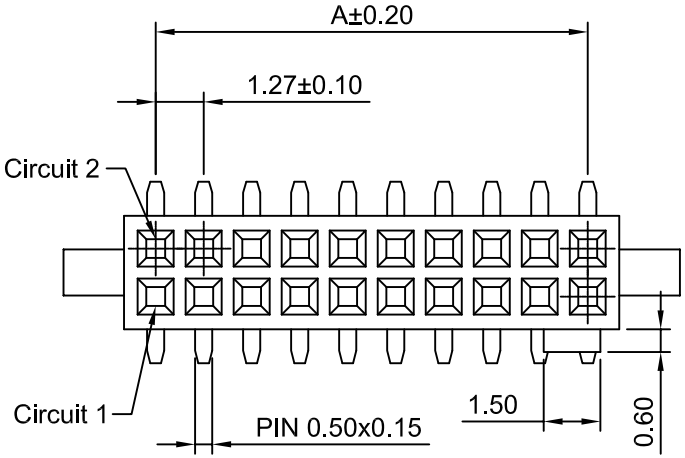

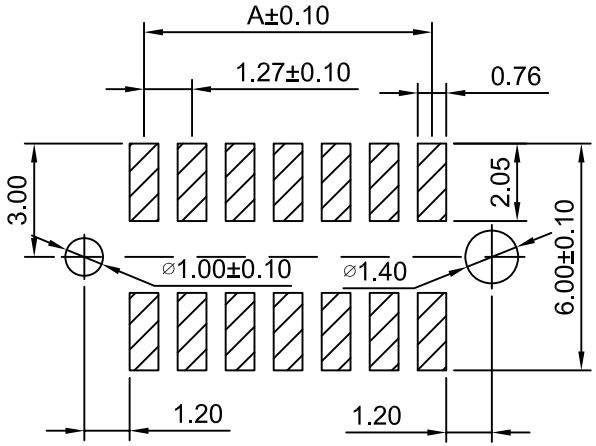

P.C.B LAYOUT

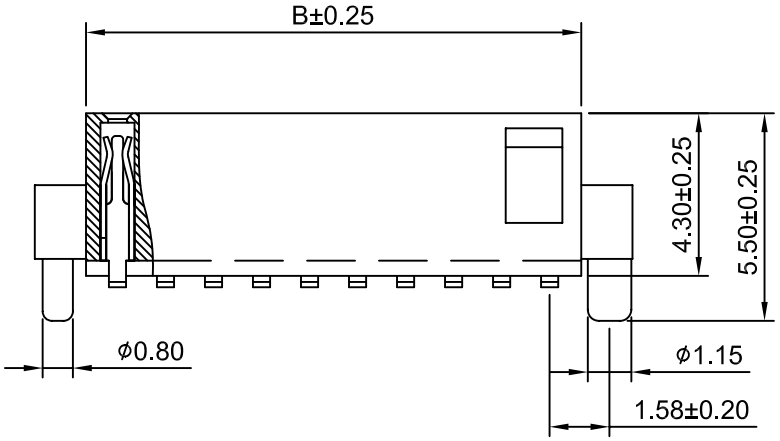

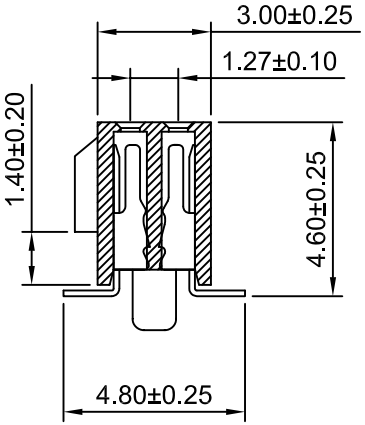

Ordering Information:

HDGC1276HWV-S-F1-2xXP - ***
1 2

1.Part No.
2.Material:
(Blank):Nylon 6T,UL94V-0
GWT :Nylon 6T,UL94V-0 GWT 750℃

SPECIFICATIONS:

Current Rating: 1A AC,DC
Voltage Rating: 30V AC,DC
Temperature Range:-25°C ~ +85°C
Contact Resistance: 20mΩ Max
Insulation Resistance: 1000MΩ Min
Withstanding Voltage: 500V AC/minute
Pin Material:Phosphor Bronze/Gold over Nickel
Material: Nylon 6T ,UL94V-0(Black)

Ordering Information & Dimensions

Circuits	Dim(mm)		Circuits	Dim(mm)		Circuits	Dim(mm)	
	A	B		A	B		A	B
2x2P	1.27	2.94	2x15P	17.78	19.45	2x28P	34.29	35.96
2x3P	2.54	4.21	2x16P	19.05	20.72	2x29P	35.56	37.23
2x4P	3.81	5.48	2x17P	20.32	21.99	2x30P	36.83	38.50
2x5P	5.08	6.75	2x18P	21.59	23.26	2x31P	38.10	39.77
2x6P	6.35	8.02	2x19P	22.86	24.53	2x32P	39.37	41.04
2x7P	7.62	9.29	2x20P	24.13	25.90	2x33P	40.64	42.31
2x8P	8.89	10.56	2x21P	25.40	27.07	2x34P	41.91	43.58
2x9P	10.16	11.83	2x22P	26.67	28.34	2x35P	43.18	44.85
2x10P	11.43	13.10	2x23P	27.94	29.61	2x36P	44.45	46.12
2x11P	12.70	14.37	2x24P	29.21	30.88	2x37P	45.72	47.39
2x12P	13.97	15.64	2x25P	30.48	32.15	2x38P	46.99	48.66
2x13P	15.24	16.91	2x26P	31.75	33.42	2x39P	48.26	49.93
2x14P	16.51	18.18	2x27P	33.02	34.69	2x40P	49.53	51.20

深圳市华德共创科技有限公司
Shenzhen Huade co-create Technology Co.,LTD
TEL：0755-27129737 FAX：0755-29940187

-TOLERANCES- UNLESS OTHERWISE SPECIFIED 公差参数表									
X.X	±0.30	X.X°	±3°	APPD: 核准：	XIE	TITLE: 产品名称：	1.27mm Pitch 180 ° Box Header		
X.XX	±0.30	X.XX°	±2°	CHECK: 校对：	WANG	DATE	SCALE	UNIT	CODE NUMBER
X.XXX	±0.10	X.XXX°	±1°	DRAW: 绘图：	WANG	2017-11-20	5:1	mm	A008
						PART NO: 产品编号：	HDGC1276HWV-S-F1-2xXP		

修订 REV	标记 MARK	修改摘要 REVISION DESCRIPTION	签名 SIGNA TURE	日期 DATE
A0		NEW RELEEASE	WANG	2017-11-20

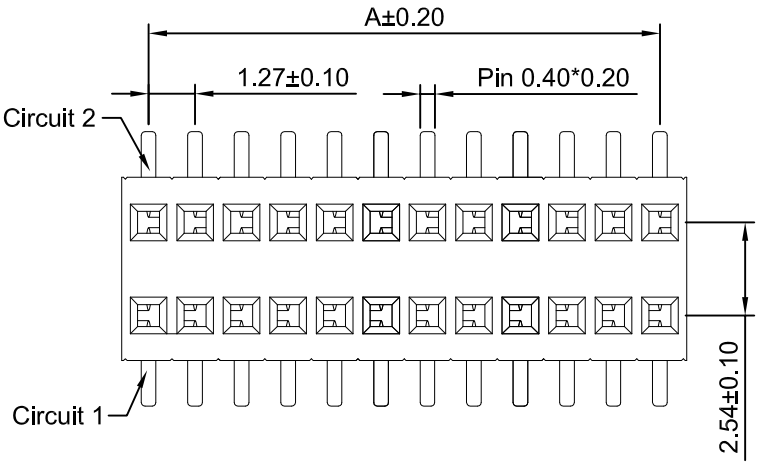

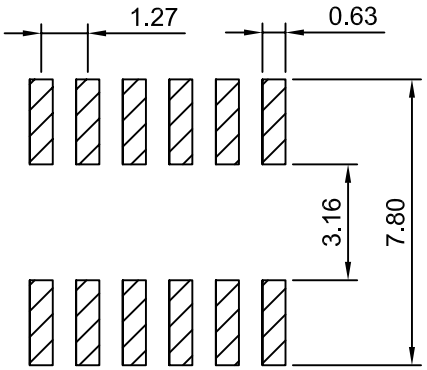

P.C.B LAYOUT

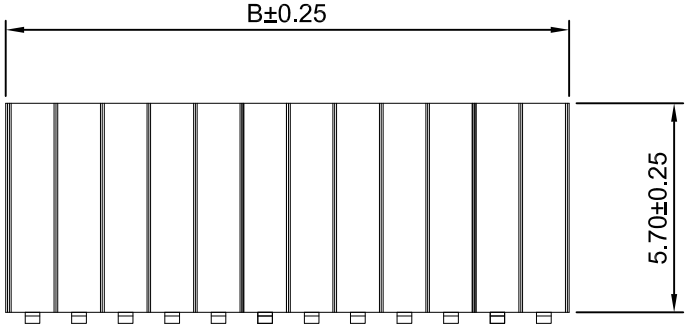

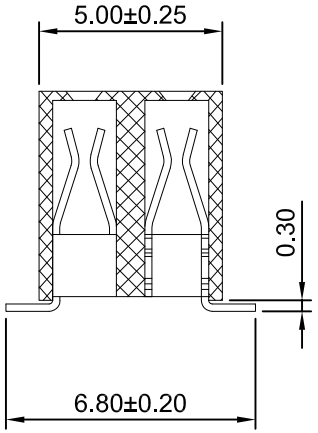

Ordering Information:

HDGC1276HWVA-S-2xXP-H57 - ***
1 2

1.Part No.
2.Material:
(Blank):Nylon 6T,UL94V-0
GWT:Nylon 6T,UL94V-0 GWT 750℃

SPECIFICATIONS:

Current Rating: 1A AC,DC
Voltage Rating: 30V AC,DC
Temperature Range:-25°C ~ +85°C
Contact Resistance: 20mΩ Max
Insulation Resistance: 1000MΩ Min
Withstanding Voltage: 500V AC/minute
Pin Material:Phosphor Bronze/Gold over Nickel
Material: Nylon 6T ,UL94V-0(Black)

Ordering Information & Dimensions

Circuits	Dim(mm)		Circuits	Dim(mm)		Circuits	Dim(mm)	
	A	B		A	B		A	B
2x2P	1.27	2.94	2x15P	17.78	19.45	2x28P	34.29	35.96
2x3P	2.54	4.21	2x16P	19.05	20.72	2x29P	35.56	37.23
2x4P	3.81	5.48	2x17P	20.32	21.99	2x30P	36.83	38.50
2x5P	5.08	6.75	2x18P	21.59	23.26	2x31P	38.10	39.77
2x6P	6.35	8.02	2x19P	22.86	24.53	2x32P	39.37	41.04
2x7P	7.62	9.29	2x20P	24.13	25.90	2x33P	40.64	42.31
2x8P	8.89	10.56	2x21P	25.40	27.07	2x34P	41.91	43.58
2x9P	10.16	11.83	2x22P	26.67	28.34	2x35P	43.18	44.85
2x10P	11.43	13.10	2x23P	27.94	29.61	2x36P	44.45	46.12
2x11P	12.70	14.37	2x24P	29.21	30.88	2x37P	45.72	47.39
2x12P	13.97	15.64	2x25P	30.48	32.15	2x38P	46.99	48.66
2x13P	15.24	16.91	2x26P	31.75	33.42	2x39P	48.26	49.93
2x14P	16.51	18.18	2x27P	33.02	34.69	2x40P	49.53	51.20

HDGC 深圳市华德共创科技有限公司
Shenzhen Huade co-create Technology Co.,LTD
TEL：0755-27129737 FAX：0755-29940187

-TOLERANCES- UNLESS OTHERWISE SPECIFIED 公差参数表						TITLE: 产品名称：	1.27mm Pitch 180 ° Box Header		
X.X	±0.30	X.X°	±3°	APPD: 核准：	XIE	PART NO: 产品编号：	HDGC1276HWVA-S-2xXP-H57		
X.XX	±0.30	X.XX°	±2°	CHECK: 校对：	WANG	DATE	SCALE	UNIT	CODE NUMBER
X.XXX	±0.10	X.XXX°	±1°	DRAW: 绘图：	WANG	2017-11-20	5:1	mm	A008

修订 REV	标记 MARK	修改摘要 REVISION DESCRIPTION	签名 SIGNA TURE	日期 DATE
A0		NEW RELEEASE	WANG	2017-11-20

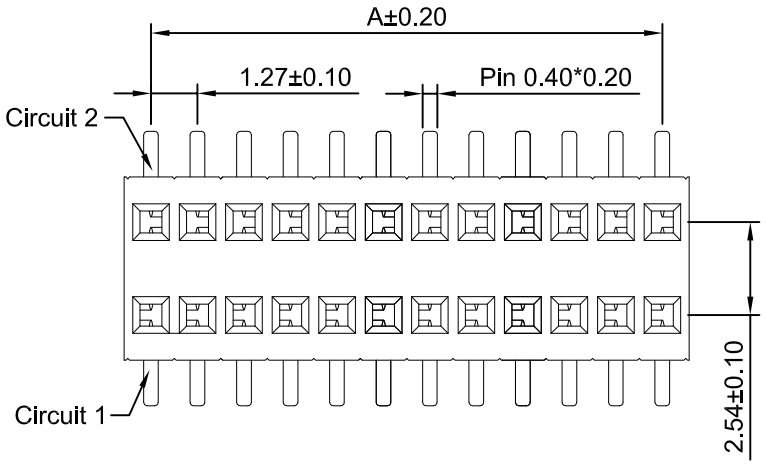

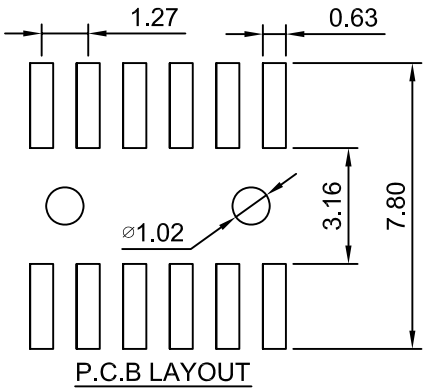

P.C.B LAYOUT

Ordering Information:

HDGC1276HWVA-S-F-2xXP-H57 - ***
1 2

1.Part No.
2.Material:
(Blank):Nylon 6T,UL94V-0
GWT :Nylon 6T,UL94V-0 GWT 750℃

SPECIFICATIONS:

Current Rating: 1A AC,DC
Voltage Rating: 30V AC,DC
Temperature Range:-25°C ~ +85°C
Contact Resistance: 20mΩ Max
Insulation Resistance: 1000MΩ Min
Withstanding Voltage: 500V AC/minute
Pin Material:Phosphor Bronze/Gold over Nickel
Material: Nylon 6T ,UL94V-0(Black)

Ordering Information & Dimensions

Circuits	Dim(mm)		Circuits	Dim(mm)		Circuits	Dim(mm)	
	A	B		A	B		A	B
2x2P	1.27	2.94	2x15P	17.78	19.45	2x28P	34.29	35.96
2x3P	2.54	4.21	2x16P	19.05	20.72	2x29P	35.56	37.23
2x4P	3.81	5.48	2x17P	20.32	21.99	2x30P	36.83	38.50
2x5P	5.08	6.75	2x18P	21.59	23.26	2x31P	38.10	39.77
2x6P	6.35	8.02	2x19P	22.86	24.53	2x32P	39.37	41.04
2x7P	7.62	9.29	2x20P	24.13	25.90	2x33P	40.64	42.31
2x8P	8.89	10.56	2x21P	25.40	27.07	2x34P	41.91	43.58
2x9P	10.16	11.83	2x22P	26.67	28.34	2x35P	43.18	44.85
2x10P	11.43	13.10	2x23P	27.94	29.61	2x36P	44.45	46.12
2x11P	12.70	14.37	2x24P	29.21	30.88	2x37P	45.72	47.39
2x12P	13.97	15.64	2x25P	30.48	32.15	2x38P	46.99	48.66
2x13P	15.24	16.91	2x26P	31.75	33.42	2x39P	48.26	49.93
2x14P	16.51	18.18	2x27P	33.02	34.69	2x40P	49.53	51.20

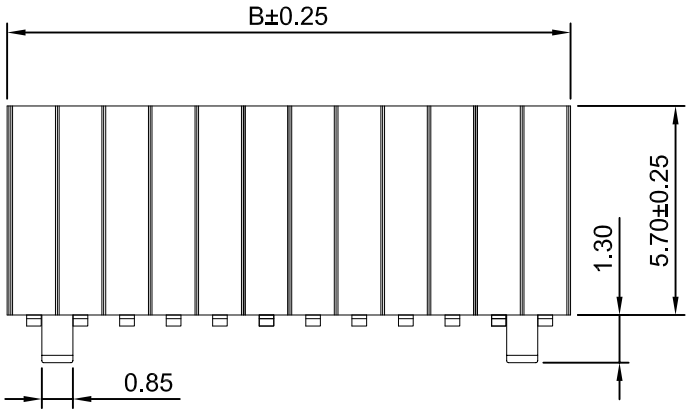

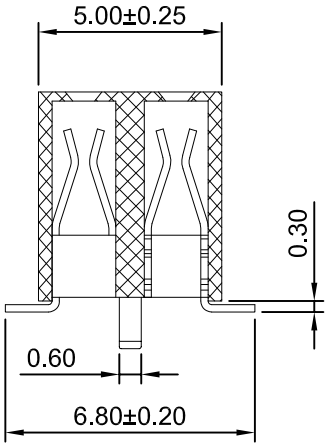

深圳市华德共创科技有限公司
Shenzhen Huade co-create Technology Co.,LTD
TEL：0755-27129737 FAX：0755-29940187

-TOLERANCES- UNLESS OTHERWISE SPECIFIED 公差参数表						TITLE: 产品名称：	1.27mm Pitch 180 ° Box Header		
X.X	±0.30	X.X°	±3°	APPD: 核准：	XIE	PART NO: 产品编号：	HDGC1276HWVA-S-F-2xXP-H57		
X.XX	±0.30	X.XX°	±2°	CHECK: 校对：	WANG	DATE	SCALE	UNIT	CODE NUMBER
X.XXX	±0.10	X.XXX°	±1°	DRAW: 绘图：	WANG	2017-11-20	5:1	mm	A008

修订 REV	标记 MARK	修改摘要 REVISION DESCRIPTION	签名 SIGNA TURE	日期 DATE
A0		NEW RELEEASE	WANG	2017-11-20

Ordering Information:

HDGC1276HWV-2xXP-H46-Y - ***
1 2

1.Part No.
2.Material:
(Blank):Nylon 6T,UL94V-0
GWT :Nylon 6T,UL94V-0 GWT 750 ℃

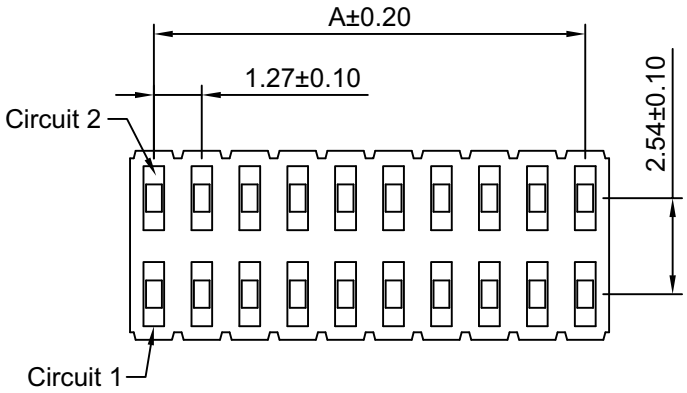

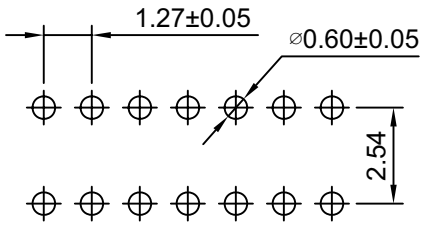

P.C.B LAYOUT

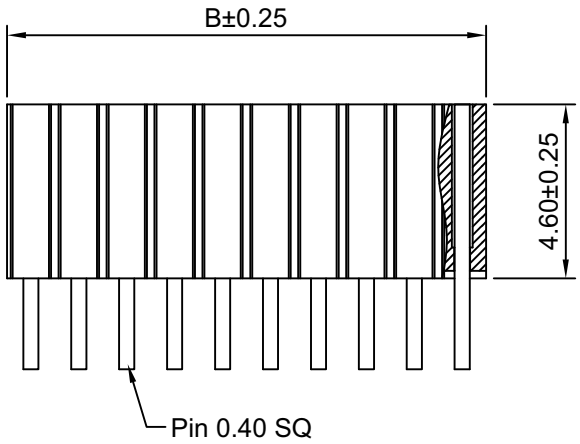

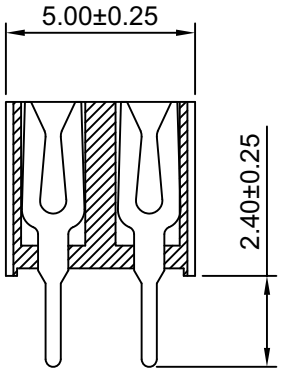

SPECIFICATIONS:

Current Rating:1A AC,DC
Voltage Rating: 30V AC,DC
Temperature Range: -25°C ~ +85°C
Contact Resistance: 20mΩ Max
Insulation Resistance: 1000MΩ Min
Withstanding Voltage: 500V AC/minute
Pin Material:Phosphor Bronze/Glod over Nickel
Material: Nylon6T,UL94V-0(Black)

Ordering Information & Dimensions

Circuits	Dim(mm)		Circuits	Dim(mm)		Circuits	Dim(mm)	
	A	B		A	B		A	B
2x2P	1.27	2.54	2x19P	22.86	24.13	2x36P	44.45	45.72
2x3P	2.54	3.81	2x20P	24.13	25.40	2x37P	45.72	46.99
2x4P	3.81	5.08	2x21P	25.40	26.67	2x38P	46.99	48.26
2x5P	5.08	6.35	2x22P	26.67	27.94	2x39P	48.26	49.53
2x6P	6.35	7.62	2x23P	27.94	29.21	2x40P	49.53	50.80
2x7P	7.62	8.89	2x24P	29.21	30.48	2x41P	50.80	52.07
2x8P	8.89	10.16	2x25P	30.48	31.75	2x42P	52.07	53.34
2x9P	10.16	11.43	2x26P	31.75	33.02	2x43P	53.34	54.61
2x10P	11.43	12.70	2x27P	33.02	34.29	2x44P	54.61	55.88
2x11P	12.70	13.97	2x28P	34.29	35.56	2x45P	55.88	57.15
2x12P	13.97	15.24	2x29P	35.56	36.83	2x46P	57.15	58.42
2x13P	15.24	16.51	2x30P	36.83	38.10	2x47P	58.42	59.69
2x14P	16.51	17.78	2x31P	38.10	39.37	2x48P	59.69	60.96
2x15P	17.78	19.05	2x32P	39.37	40.64	2x49P	60.96	62.23
2x16P	19.05	20.32	2x33P	40.64	41.91	2x50P	62.23	63.50
2x17P	20.32	21.59	2x34P	41.91	43.18			
2x18P	21.59	22.86	2x35P	43.18	44.45			

深圳市华德共创科技有限公司
Shenzhen Huade co-create Technology Co.,LTD
TEL：0755-27129737 FAX：0755-29940187

-TOLERANCES- UNLESS OTHERWISE SPECIFIED 公差参数表						TITLE: 产品名称：	1.27mm Pitch 180 ° Female Header		
X.X	±0.30	X.X°	±3°	APPD: 核准：	XIE	PART NO: 产品编号：	HDGC1276HWV-2xXP-H46-Y		
X.XX	±0.30	X.XX°	±2°	CHECK: 校对：	WANG	DATE	SCALE	UNIT	CODE NUMBER
X.XXX	±0.10	X.XXX°	±1°	DRAW: 绘图：	WANG	2017-11-20	5:1	mm	A008

修订 REV	标记 MARK	修改摘要 REVISION DESCRIPTION	签名 SIGNA TURE	日期 DATE
A0		NEW RELEEASE	WANG	2017-11-20

Ordering Information:

HDGC1276HWV-S-2xXP-H46-Y - ***
1 2

1.Part No.
2.Material:
(Blank):Nylon 6T,UL94V-0
GWT :Nylon 6T,UL94V-0 GWT 750 ℃

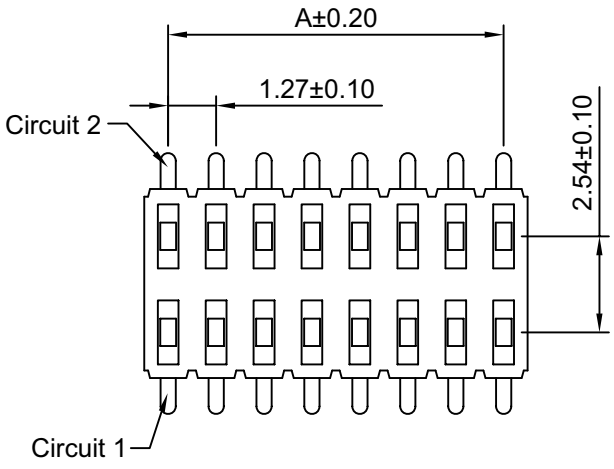

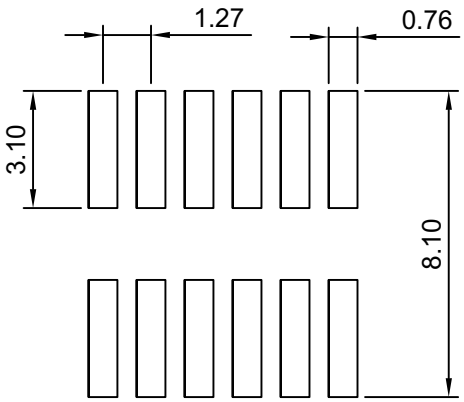

P.C.B LAYOUT

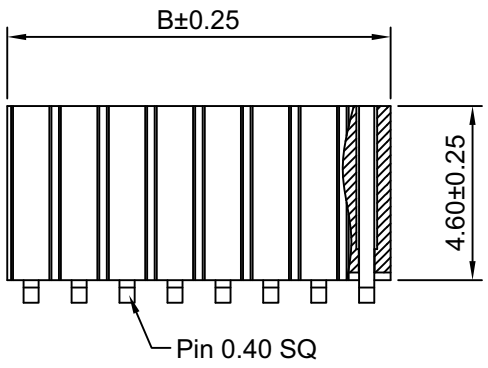

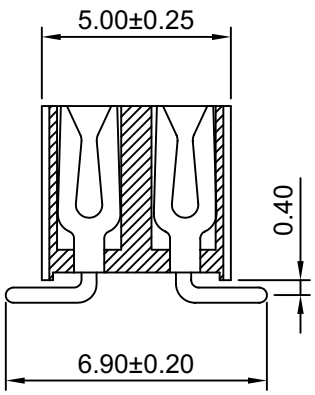

SPECIFICATIONS:

Current Rating:1A AC,DC
Voltage Rating: 30V AC,DC
Temperature Range: -25°C ~ +85°C
Contact Resistance: 20mΩ Max
Insulation Resistance: 1000MΩ Min
Withstanding Voltage: 500V AC/minute
Pin Material:Phosphor Bronze/Glod over Nickel
Material: Nylon6T,UL94V-0(Black)

Ordering Information & Dimensions

Circuits	Dim(mm)		Circuits	Dim(mm)		Circuits	Dim(mm)	
	A	B		A	B		A	B
2x2P	1.27	2.54	2x19P	22.86	24.13	2x36P	44.45	45.72
2x3P	2.54	3.81	2x20P	24.13	25.40	2x37P	45.72	46.99
2x4P	3.81	5.08	2x21P	25.40	26.67	2x38P	46.99	48.26
2x5P	5.08	6.35	2x22P	26.67	27.94	2x39P	48.26	49.53
2x6P	6.35	7.62	2x23P	27.94	29.21	2x40P	49.53	50.80
2x7P	7.62	8.89	2x24P	29.21	30.48	2x41P	50.80	52.07
2x8P	8.89	10.16	2x25P	30.48	31.75	2x42P	52.07	53.34
2x9P	10.16	11.43	2x26P	31.75	33.02	2x43P	53.34	54.61
2x10P	11.43	12.70	2x27P	33.02	34.29	2x44P	54.61	55.88
2x11P	12.70	13.97	2x28P	34.29	35.56	2x45P	55.88	57.15
2x12P	13.97	15.24	2x29P	35.56	36.83	2x46P	57.15	58.42
2x13P	15.24	16.51	2x30P	36.83	38.10	2x47P	58.42	59.69
2x14P	16.51	17.78	2x31P	38.10	39.37	2x48P	59.69	60.96
2x15P	17.78	19.05	2x32P	39.37	40.64	2x49P	60.96	62.23
2x16P	19.05	20.32	2x33P	40.64	41.91	2x50P	62.23	63.50
2x17P	20.32	21.59	2x34P	41.91	43.18			
2x18P	21.59	22.86	2x35P	43.18	44.45			

HDGC 深圳市华德共创科技有限公司
Shenzhen Huade co-create Technology Co.,LTD
TEL：0755-27129737 FAX：0755-29940187

-TOLERANCES- UNLESS OTHERWISE SPECIFIED 公差参数表								
X.X	±0.30	X.X°	±3°	APPD: 核准：	XIE	TITLE: 产品名称：	1.27mm Pitch 180 ° Female Header	
X.XX	±0.30	X.XX°	±2°	CHECK: 校对：	WANG	PART NO: 产品编号：	HDGC1276HWV-S-2xXP-H46-Y	
X.XXX	±0.10	X.XXX°	±1°	DRAW: 绘图：	WANG	DATE: 2017-11-20	SCALE: 5:1	UNIT: mm / CODE NUMBER: A008

修订 REV	标记 MARK	修改摘要 REVISION DESCRIPTION	签名 SIGNA TURE	日期 DATE
A0		NEW RELEEASE	WANG	2017-11-20

Ordering Information:

HDGC1276HWV-2xXP-H85-Y - ***
1 2

1.Part No.
2.Material:
(Blank):Nylon 6T,UL94V-0
GWT :Nylon 6T,UL94V-0 GWT 750℃

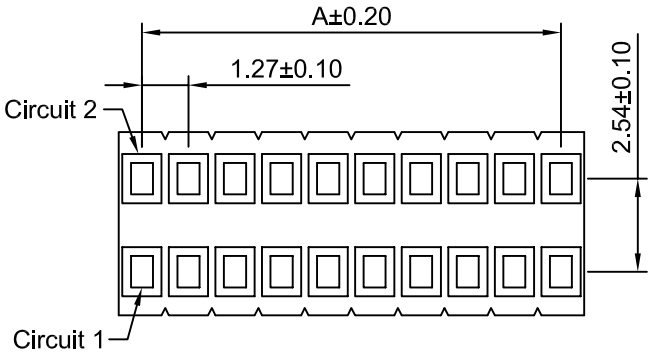

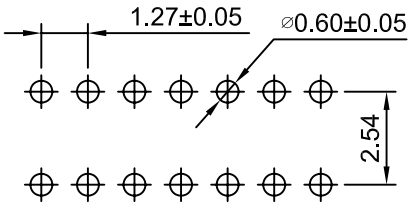

P.C.B LAYOUT

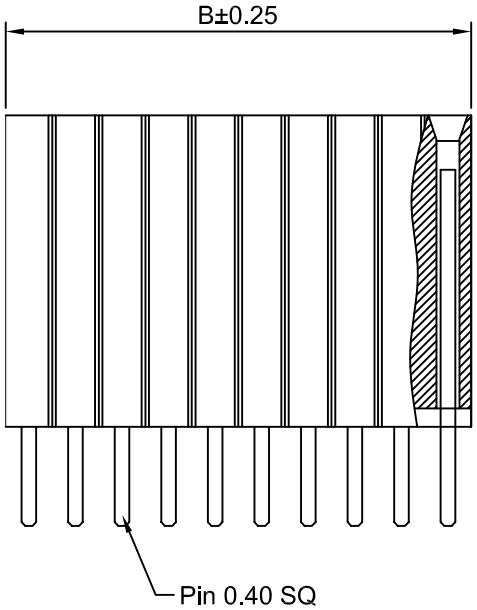

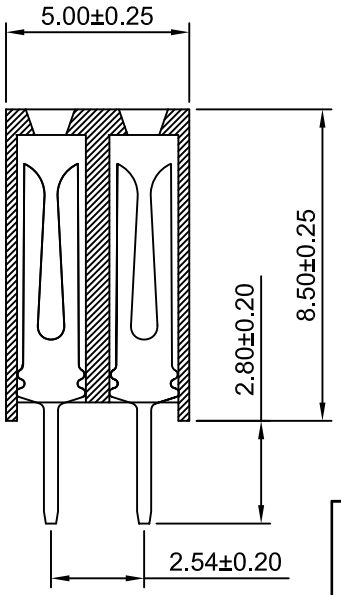

SPECIFICATIONS:

Current Rating:1A AC,DC
Voltage Rating: 30V AC,DC
Temperature Range: -25°C ~ +85°C
Contact Resistance: 20mΩ Max
Insulation Resistance: 1000MΩ Min
Withstanding Voltage: 500V AC/minute
Pin Material:Phosphor Bronze/Glod over Nickel
Material: Nylon6T,UL94V-0(Black)

Ordering Information & Dimensions

Circuits	Dim(mm)		Circuits	Dim(mm)		Circuits	Dim(mm)	
	A	B		A	B		A	B
2x2P	1.27	2.54	2x19P	22.86	24.13	2x36P	44.45	45.72
2x3P	2.54	3.81	2x20P	24.13	25.40	2x37P	45.72	46.99
2x4P	3.81	5.08	2x21P	25.40	26.67	2x38P	46.99	48.26
2x5P	5.08	6.35	2x22P	26.67	27.94	2x39P	48.26	49.53
2x6P	6.35	7.62	2x23P	27.94	29.21	2x40P	49.53	50.80
2x7P	7.62	8.89	2x24P	29.21	30.48	2x41P	50.80	52.07
2x8P	8.89	10.16	2x25P	30.48	31.75	2x42P	52.07	53.34
2x9P	10.16	11.43	2x26P	31.75	33.02	2x43P	53.34	54.61
2x10P	11.43	12.70	2x27P	33.02	34.29	2x44P	54.61	55.88
2x11P	12.70	13.97	2x28P	34.29	35.56	2x45P	55.88	57.15
2x12P	13.97	15.24	2x29P	35.56	36.83	2x46P	57.15	58.42
2x13P	15.24	16.51	2x30P	36.83	38.10	2x47P	58.42	59.69
2x14P	16.51	17.78	2x31P	38.10	39.37	2x48P	59.69	60.96
2x15P	17.78	19.05	2x32P	39.37	40.64	2x49P	60.96	62.23
2x16P	19.05	20.32	2x33P	40.64	41.91	2x50P	62.23	63.50
2x17P	20.32	21.59	2x34P	41.91	43.18			
2x18P	21.59	22.86	2x35P	43.18	44.45			

HDGC 深圳市华德共创科技有限公司
Shenzhen Huade co-create Technology Co.,LTD
TEL：0755-27129737 FAX：0755-29940187

-TOLERANCES- UNLESS OTHERWISE SPECIFIED 公差参数表									
X.X	±0.30	X.X°	±3°	APPD: 核准：	XIE	TITLE: 产品名称：	1.27mm Pitch 180 ° Female Header		
X.XX	±0.30	X.XX°	±2°	CHECK: 校对：	WANG	PART NO: 产品编号：	HDGC1276HWV-2xXP-H85-Y		
X.XXX	±0.10	X.XXX°	±1°	DRAW: 绘图：	WANG	DATE	SCALE	UNIT	CODE NUMBER
						2017-11-20	5:1	mm	A008

修订 REV	标记 MARK	修改摘要 REVISION DESCRIPTION	签名 SIGNA TURE	日期 DATE
A0		NEW RELEEASE	WANG	2017-11-20

Ordering Information:

HDGC1276HWV-S-2xXP-H85-Y - ***
1 2

1.Part No.
2.Material:
(Blank):Nylon 6T,UL94V-0
GWT :Nylon 6T,UL94V-0 GWT 750℃

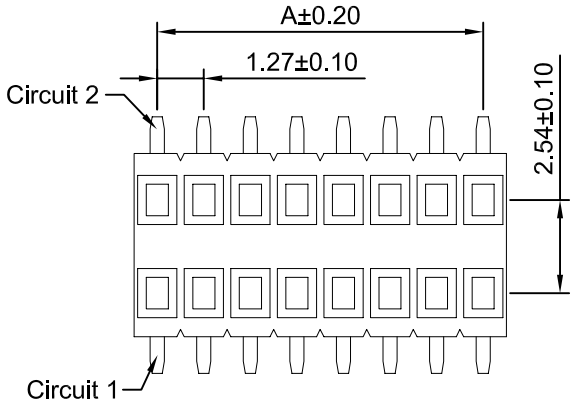

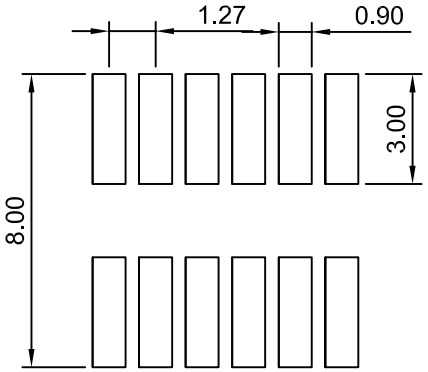

P.C.B LAYOUT

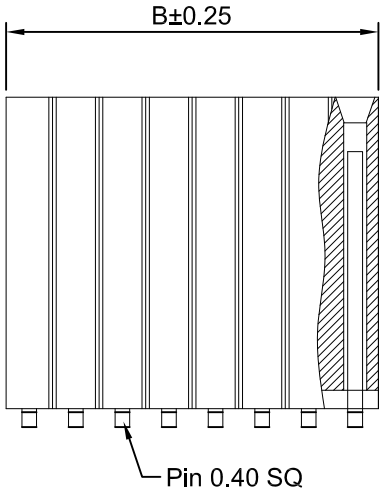

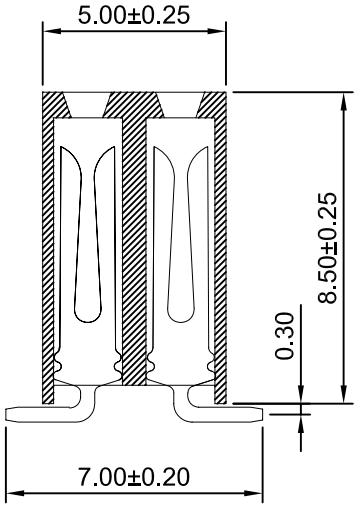

SPECIFICATIONS:

Current Rating:1A AC,DC
Voltage Rating: 30V AC,DC
Temperature Range: -25°C ~ +85°C
Contact Resistance: 20mΩ Max
Insulation Resistance: 1000MΩ Min
Withstanding Voltage: 500V AC/minute
Pin Material:Phosphor Bronze/Glod over Nickel
Material: Nylon6T,UL94V-0(Black)

Ordering Information & Dimensions

Circuits	Dim(mm)		Circuits	Dim(mm)		Circuits	Dim(mm)	
	A	B		A	B		A	B
2x2P	1.27	2.54	2x19P	22.86	24.13	2x36P	44.45	45.72
2x3P	2.54	3.81	2x20P	24.13	25.40	2x37P	45.72	46.99
2x4P	3.81	5.08	2x21P	25.40	26.67	2x38P	46.99	48.26
2x5P	5.08	6.35	2x22P	26.67	27.94	2x39P	48.26	49.53
2x6P	6.35	7.62	2x23P	27.94	29.21	2x40P	49.53	50.80
2x7P	7.62	8.89	2x24P	29.21	30.48	2x41P	50.80	52.07
2x8P	8.89	10.16	2x25P	30.48	31.75	2x42P	52.07	53.34
2x9P	10.16	11.43	2x26P	31.75	33.02	2x43P	53.34	54.61
2x10P	11.43	12.70	2x27P	33.02	34.29	2x44P	54.61	55.88
2x11P	12.70	13.97	2x28P	34.29	35.56	2x45P	55.88	57.15
2x12P	13.97	15.24	2x29P	35.56	36.83	2x46P	57.15	58.42
2x13P	15.24	16.51	2x30P	36.83	38.10	2x47P	58.42	59.69
2x14P	16.51	17.78	2x31P	38.10	39.37	2x48P	59.69	60.96
2x15P	17.78	19.05	2x32P	39.37	40.64	2x49P	60.96	62.23
2x16P	19.05	20.32	2x33P	40.64	41.91	2x50P	62.23	63.50
2x17P	20.32	21.59	2x34P	41.91	43.18			
2x18P	21.59	22.86	2x35P	43.18	44.45			

深圳市华德共创科技有限公司
Shenzhen Huade co-create Technology Co.,LTD
TEL：0755-27129737 FAX：0755-29940187

-TOLERANCES- UNLESS OTHERWISE SPECIFIED 公差参数表									
X.X	±0.30	X.X°	±3°	APPD: 核准：	XIE	TITLE: 产品名称：	1.27mm Pitch 180 ° Female Header		
X.XX	±0.30	X.XX°	±2°	CHECK: 校对：	WANG	PART NO: 产品编号：	HDGC1276HWV-S-2xXP-H85-Y		
X.XXX	±0.10	X.XXX°	±1°	DRAW: 绘图：	WANG	DATE	SCALE	UNIT	CODE NUMBER
						2017-11-20	5:1	mm	A008

修订 REV	标记 MARK	修改摘要 REVISION DESCRIPTION	签名 SIGNA TURE	日期 DATE
A0		NEW RELEEASE	WANG	2017-11-20

Ordering Information:

HDGC1276HWRA-2xXP - ***
1 2

1.Part No.
2.Material:
(Blank):Nylon 6T,UL94V-0
GWT :Nylon 6T,UL94V-0 GWT 750℃

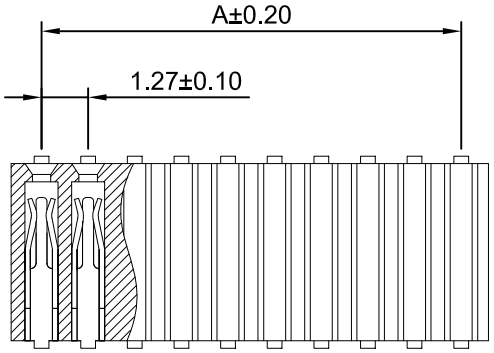

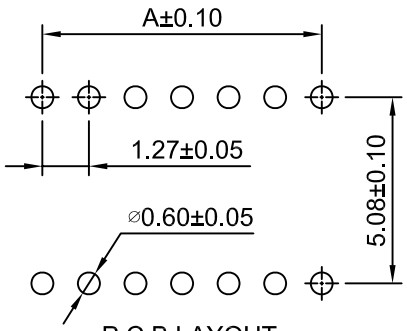

P.C.B LAYOUT

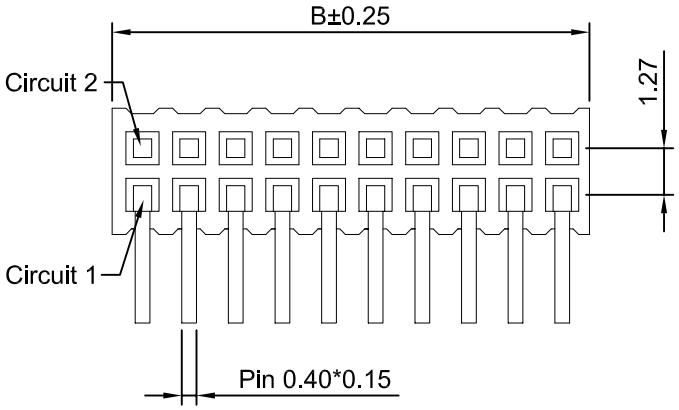

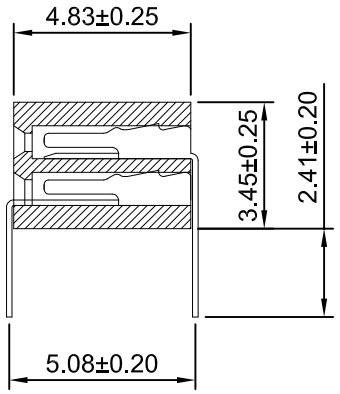

SPECIFICATIONS:

Current Rating: 1A AC,DC
Voltage Rating: 30V AC,DC
Temperature Range: -25°C ~ +85°C
Contact Resistance: 20mΩ Max
Insulation Resistance: 1000MΩ Min
Withstanding Voltage: 500V AC/minute
Pin Material:Phosphor Bronze/Gold over Nickel
Material: Nylon 6T ,UL94V-0(Black)

Ordering Information & Dimensions

Circuits	Dim(mm)		Circuits	Dim(mm)		Circuits	Dim(mm)	
	A	B		A	B		A	B
2x2P	1.27	2.84	2x15P	17.78	19.35	2x28P	34.29	35.86
2x3P	2.54	4.11	2x16P	19.05	20.62	2x29P	35.56	37.13
2x4P	3.81	5.38	2x17P	20.32	21.89	2x30P	36.83	38.40
2x5P	5.08	6.65	2x18P	21.59	23.16	2x31P	38.10	39.67
2x6P	6.35	7.92	2x19P	22.86	24.43	2x32P	39.37	40.94
2x7P	7.62	9.19	2x20P	24.13	25.80	2x33P	40.64	42.21
2x8P	8.89	10.46	2x21P	25.40	26.97	2x34P	41.91	43.48
2x9P	10.16	11.73	2x22P	26.67	28.24	2x35P	43.18	44.75
2x10P	11.43	13.00	2x23P	27.94	29.51	2x36P	44.45	46.02
2x11P	12.70	14.27	2x24P	29.21	30.78	2x37P	45.72	47.29
2x12P	13.97	15.54	2x25P	30.48	32.05	2x38P	46.99	48.56
2x13P	15.24	16.81	2x26P	31.75	33.32	2x39P	48.26	49.83
2x14P	16.51	18.08	2x27P	33.02	34.59	2x40P	49.53	51.10

深圳市华德共创科技有限公司
Shenzhen Huade co-create Technology Co.,LTD
TEL：0755-27129737 FAX：0755-29940187

-TOLERANCES- UNLESS OTHERWISE SPECIFIED 公差参数表									
X.X	±0.30	X.X°	±3°	APPD: 核准：	XIE	TITLE: 产品名称：	1.27mm Pitch 90 ° Box Header		
X.XX	±0.30	X.XX°	±2°	CHECK: 校对：	WANG	DATE	SCALE	UNIT	CODE NUMBER
X.XXX	±0.10	X.XXX°	±1°	DRAW: 绘图：	WANG	2017-11-20	5:1	mm	A008
						PART NO: 产品编号：	HDGC1276HWRA-2xXP		

修订 REV	标记 MARK	修改摘要 REVISION DESCRIPTION	签名 SIGNA TURE	日期 DATE
A0		NEW RELEEASE	WANG	2017-11-20

Ordering Information:

HDGC1276HWRA-S-2xXP - ***
1 2

1.Part No.
2.Material:
(Blank):Nylon 6T,UL94V-0
GWT :Nylon 6T,UL94V-0 GWT 750℃

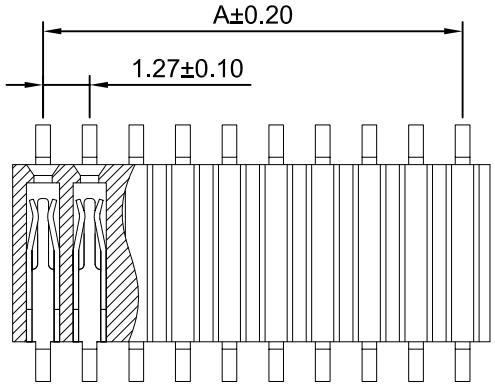

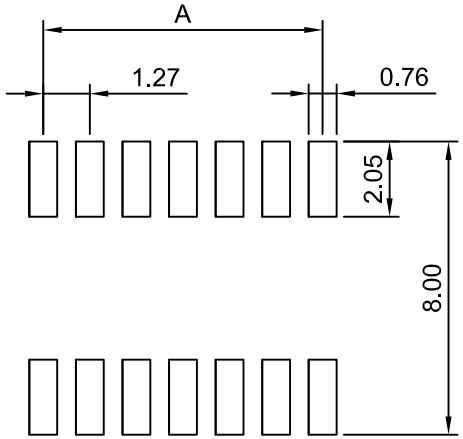

P.C.B LAYOUT

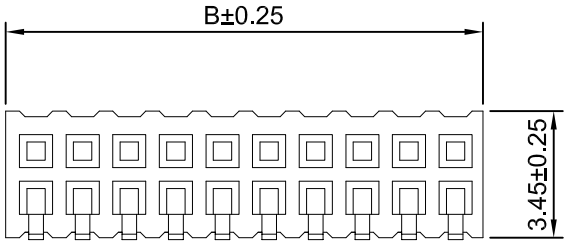

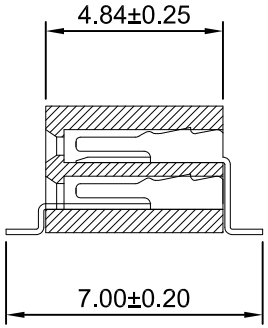

SPECIFICATIONS:

Current Rating: 1A AC,DC
Voltage Rating: 30V AC,DC
Temperature Range:-25°C ~ +85°C
Contact Resistance: 20mΩ Max
Insulation Resistance: 1000MΩ Min
Withstanding Voltage: 500V AC/minute
Pin Material:Phosphor Bronze/Gold over Nickel
Material: Nylon 6T ,UL94V-0(Black)

Ordering Information & Dimensions

Circuits	Dim(mm)		Circuits	Dim(mm)		Circuits	Dim(mm)	
	A	B		A	B		A	B
2x2P	1.27	2.84	2x15P	17.78	19.35	2x28P	34.29	35.86
2x3P	2.54	4.11	2x16P	19.05	20.62	2x29P	35.56	37.13
2x4P	3.81	5.38	2x17P	20.32	21.89	2x30P	36.83	38.40
2x5P	5.08	6.65	2x18P	21.59	23.16	2x31P	38.10	39.67
2x6P	6.35	7.92	2x19P	22.86	24.43	2x32P	39.37	40.94
2x7P	7.62	9.19	2x20P	24.13	25.80	2x33P	40.64	42.21
2x8P	8.89	10.46	2x21P	25.40	26.97	2x34P	41.91	43.48
2x9P	10.16	11.73	2x22P	26.67	28.24	2x35P	43.18	44.75
2x10P	11.43	13.00	2x23P	27.94	29.51	2x36P	44.45	46.02
2x11P	12.70	14.27	2x24P	29.21	30.78	2x37P	45.72	47.29
2x12P	13.97	15.54	2x25P	30.48	32.05	2x38P	46.99	48.56
2x13P	15.24	16.81	2x26P	31.75	33.32	2x39P	48.26	49.83
2x14P	16.51	18.08	2x27P	33.02	34.59	2x40P	49.53	51.10

HDGC 深圳市华德共创科技有限公司
Shenzhen Huade co-create Technology Co.,LTD
TEL：0755-27129737 FAX：0755-29940187

-TOLERANCES- UNLESS OTHERWISE SPECIFIED 公差参数表						TITLE: 产品名称：	1.27mm Pitch 90 ° Box Header		
X.X	±0.30	X.X°	±3°	APPD: 核准：	XIE	PART NO: 产品编号：	HDGC1276HWRA-S-2xXP		
X.XX	±0.30	X.XX°	±2°	CHECK: 校对：	WANG	DATE	SCALE	UNIT	CODE NUMBER
X.XXX	±0.10	X.XXX°	±1°	DRAW: 绘图：	WANG	2017-11-20	5:1	mm	A008

修订 REV	标记 MARK	修改摘要 REVISION DESCRIPTION	签名 SIGNA TURE	日期 DATE
A0		NEW RELEEASE	WANG	2017-11-20

Ordering Information:

HDGC1276HWRA-S-F-2xXP - ***

1 2

1.Part No.

2.Material:

(Blank):Nylon 6T,UL94V-0

GWT :Nylon 6T,UL94V-0 GWT 750℃

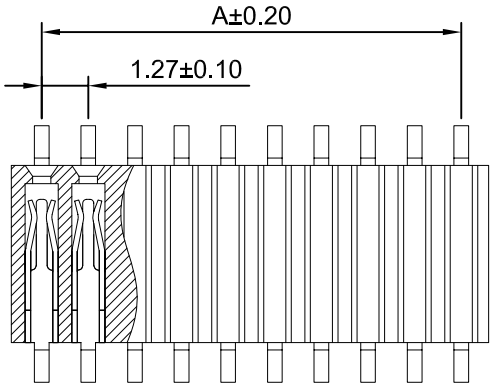

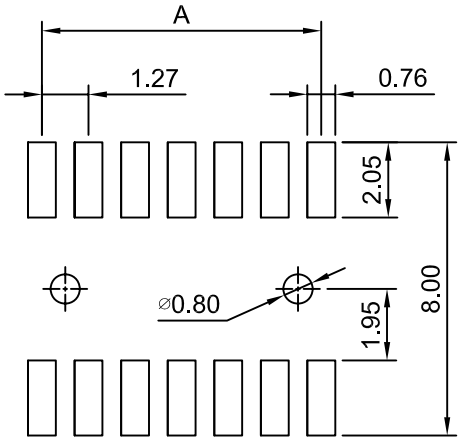

P.C.B LAYOUT

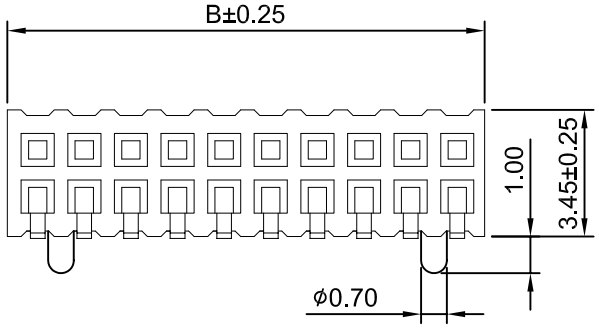

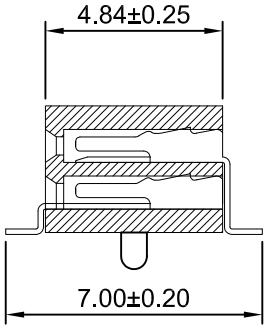

SPECIFICATIONS:

Current Rating: 1A AC,DC
Voltage Rating: 30V AC,DC
Temperature Range:-25°C ~ +85°C
Contact Resistance: 20mΩ Max
Insulation Resistance: 1000MΩ Min
Withstanding Voltage: 500V AC/minute
Pin Material:Phosphor Bronze/Gold over Nickel
Material: Nylon 6T ,UL94V-0(Black)

Ordering Information & Dimensions

Circuits	Dim(mm)		Circuits	Dim(mm)		Circuits	Dim(mm)	
	A	B		A	B		A	B
2x2P	1.27	2.84	2x15P	17.78	19.35	2x28P	34.29	35.86
2x3P	2.54	4.11	2x16P	19.05	20.62	2x29P	35.56	37.13
2x4P	3.81	5.38	2x17P	20.32	21.89	2x30P	36.83	38.40
2x5P	5.08	6.65	2x18P	21.59	23.16	2x31P	38.10	39.67
2x6P	6.35	7.92	2x19P	22.86	24.43	2x32P	39.37	40.94
2x7P	7.62	9.19	2x20P	24.13	25.80	2x33P	40.64	42.21
2x8P	8.89	10.46	2x21P	25.40	26.97	2x34P	41.91	43.48
2x9P	10.16	11.73	2x22P	26.67	28.24	2x35P	43.18	44.75
2x10P	11.43	13.00	2x23P	27.94	29.51	2x36P	44.45	46.02
2x11P	12.70	14.27	2x24P	29.21	30.78	2x37P	45.72	47.29
2x12P	13.97	15.54	2x25P	30.48	32.05	2x38P	46.99	48.56
2x13P	15.24	16.81	2x26P	31.75	33.32	2x39P	48.26	49.83
2x14P	16.51	18.08	2x27P	33.02	34.59	2x40P	49.53	51.10

HDGC 深圳市华德共创科技有限公司
Shenzhen Huade co-create Technology Co.,LTD
TEL：0755-27129737 FAX：0755-29940187

-TOLERANCES- UNLESS OTHERWISE SPECIFIED 公差参数表						TITLE: 产品名称：	1.27mm Pitch 90 ° Box Header		
X.X	±0.30	X.X°	±3°	APPD: 核准：	XIE	PART NO: 产品编号：	HDGC1276HWRA-S-F-2xXP		
X.XX	±0.30	X.XX°	±2°	CHECK: 校对：	WANG	DATE	SCALE	UNIT	CODE NUMBER
X.XXX	±0.10	X.XXX°	±1°	DRAW: 绘图：	WANG	2017-11-20	5:1	mm	A008